608172

EZGO

A Textron Company

KAWASAKI ENGINE SHOP REBUILD MANUAL

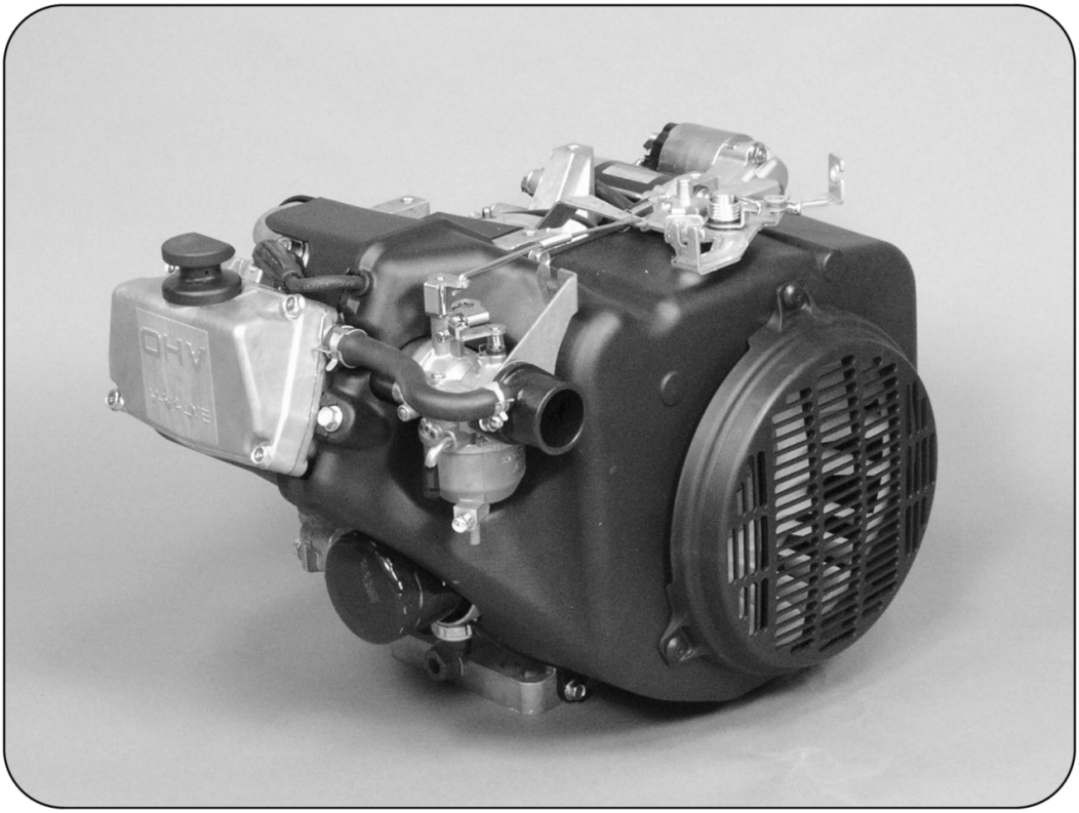

4-STROKE AIR-COOLED GASOLINE ENGINE

STARTING MODEL YEAR: 2008

REVISED OCTOBER 2008

NOTES

KAWASAKI ENGINE SHOP REBUILD MANUAL

4-STROKE AIR-COOLED GASOLINE ENGINE

E-Z-GO Division of Textron, Inc. reserves the right to make design changes without obligation to make these changes on units previously sold and the information contained in this manual is subject to change without notice.

E-Z-GO Division of Textron, Inc. is not liable for errors in this manual or for incidental or consequential damages that result from the use of the material in this manual.

E-Z-GO DIVISION OF TEXTRON, INC., 1451 MARVIN GRIFFIN RD., AUGUSTA, GEORGIA USA 30906

NOTES

TO OBTAIN A COPY OF THE LIMITED WARRANTY THAT IS APPLICABLE TO THE VEHICLE, CALL OR WRITE THE LOCAL DISTRIBUTOR, E-Z-G0 BRANCH OR E-Z-G0 WARRANTY DEPARTMENT WITH VEHICLE SERIAL NUMBER AND MANUFACTURER'S CODE.

THE USE OF NON E-Z-GO PARTS AND HARDWARE MAY VOID THE WARRANTY.

TAMPERING WITH OR ADJUSTING GOVERNOR TO PERMIT VEHICLE TO OPERATE AT ABOVE FACTORY SETTINGS WILL VOID THE VEHICLE WARRANTY.

IF APPLICABLE, REFER TO BACK COVER FOR CALIFORNIA AND/OR FEDERAL EMISSIONS CONTROL WARRANTY STATEMENT.

WARNING

Engine exhaust from this product contains chemicals known, in certain quantities, to cause cancer, birth defects, or other reproductive harm.

NOTE

The exhaust emissions of this vehicle's engine comply with regulations set forth by the Environmental Protection Agency (EPA) of the United States of America (USA) at time of manufacture. Significant fines could result from modifications or tampering with the engine, fuel, ignition or air intake systems.

TABLE OF CONTENTS

	Section	Page No.
HOW TO USE THIS MANUAL		vii
ENGINE TOP END DISASSEMBLY	**A**	
ENGINE TOP END		
• Tool List		A-1
CYLINDER HEAD		
• Remove Cylinder Head		A-1
VALVES		
• Remove Valve Mechanism		A-2
SPECIFICATIONS		A-3
EXPLODED VIEW		A-4
ENGINE BOTTOM END DISASSEMBLY	**B**	
ENGINE BOTTOM END		
• Tool List		B-1
CRANKCASE		
• Remove Crankcase Cover		B-1
CAMSHAFT AND TAPPETS		
• Remove Camshaft, Tappet		B-1
CYLINDERS AND PISTONS		
• Remove Piston		B-2
CRANKSHAFT AND CONNECTING RODS		
• Remove Connecting Rod		B-3
• Remove Crankshaft		B-3
BALANCER SHAFT		
• Remove Balancer Shaft		B-3
BREATHER VALVE		
• Remove Breather Valve		B-3
SPECIFICATIONS		B-4
EXPLODED VIEW		B-6

TABLE OF CONTENTS

	Section	Page No.
ENGINE MEASUREMENTS AND SPECIFICATIONS	**C**	
ENGINE MEASUREMENTS AND SPECIFICATIONS		
• Tool List		C-1
• Using Telescoping Gauges and Hole Gauges		C-1
CYLINDER HEAD		
• Measure Cylinder Compression		C-1
• Inspect Push Rod		C-3
• Inspect Rocker Arm		C-3
• Measure Cylinder Head Warp		C-3
VALVES		
• Inspect Valve Clearance		C-4
• Adjust Valve Clearance		C-4
• Inspect Valve Seat		C-4
• Repair Valve Seat		C-4
• Operating Procedures		C-5
• Measure Valve Spring Free Length		C-8
• Measure Valve Head Thickness		C-8
• Measure Valve Stem Bend		C-8
• Measure Valve Stem Diameter		C-9
• Measure Valve Guide Inside Diameter		C-9
• Measure Valve/Guide Clearance (Wobble Method)		C-9
CAMSHAFT AND TAPPETS		
• Measure Camshaft Bearing/Journal Wear		C-10
CYLINDER AND PISTONS		
• Clean Piston		C-11
• Check Piston Ring and Ring Groove Wear		C-11
• Measure Piston Ring End Gap		C-12
• Measure Piston Pin, Piston Pin Hole, and Connecting Rod Wear		C-13
• Measure Piston Diameter		C-13
• Check Cylinder Inside Diameter		C-14
CRANKSHAFT AND CONNECTING RODS		
• Clean/Inspect		C-14
• Measure Connecting Rod Bend/Twist		C-14
• Measure Connecting Rod Big End/Crankpin Width Wear		C-15
• Measure Connecting Rod Big End Bearing/Crankpin Wear		C-15
• Measure Crankshaft Runout		C-16
• Measure Crankshaft Main Bearing/Journal Wear		C-16
BALANCER SHAFT		
• Measure Balancer Shaft Bearing/Journal Wear		C-17
BREATHER VALVE		
• Inspect Breather Valve		C-17

TABLE OF CONTENTS

	Section	Page No.
ENGINE BOTTOM END REASSEMBLY	**D**	
ENGINE BOTTOM END		
• Tool List		D-1
BREATHER VALVE		
• Install Breather Valve		D-1
BALANCER SHAFT		
• Install Balancer Shaft		D-1
CRANKSHAFT AND CONNECTING RODS		
• Install Crankshaft		D-2
• Install Connecting Rod		D-2
CYLINDERS AND PISTONS		
• Install Piston		D-2
CAMSHAFT AND PISTONS		
• Install Camshaft, Tappet		D-4
CRANKCASE		
• Assemble Crankcase Cover		D-4
• Install Crankcase Cover		D-4
ENGINE TOP END REASSEMBLY	**E**	
ENGINE TOP END		
• Tool List		E-1
VALVES		
• Install Valve Mechanism		E-1
CYLINDER HEAD		
• Install Cylinder Head		E-1

TABLE OF CONTENTS

	Section	Page No.
ILLUSTRATED PARTS BREAKDOWN	**F**	
CYLINDER/CRANKCASE		F-2
PISTON/CRANKSHAFT		F-4
VALVE/CAMSHAFT		F-6
LUBRICATION		F-8
COOLING		F-10
ELECTRICAL		F-12
CARBURETOR/CABLE BRACKETS		F-14
AIR INTAKE/BREATHER - EXHAUST		F-16
LIMITED WARRANTY	**G**	
Federal Emissions Component Defect Warranty		G-1
California Emission Control Warranty Statement (1995-1999)		G-5
California Emission Control Warranty Statement (2000)		G-8
California Emission Control Warranty Statement (2001)		G-11
California Emission Control Warranty Statement (2004)		G-14

HOW TO USE THIS MANUAL

This manual is designed to suit the needs of mechanics at all levels of experience with the E-Z-GO 4-cycle engine. The outline format allows the mechanic to choose the level of instructional detail needed to completely disassemble, diagnose, repair/overhaul and reassemble the engine.

The manual is divided into four major operational sections, which are each divided into smaller operational sections. At the beginning of each major section is a list of tools that will be required to perform the operations desired in that section. ***Do not use non-specified tools (vise grips®, hammers, adjustable wrenches, etc.). The use of these tools could cause permanent damage to the engine components.***

WE STRONGLY RECOMMEND that, no matter what your experience level, you use this manual as a guide when disassembling, repairing/overhauling and reassembling the engine. Before working on the engine, ***read and understand the text and in particular each NOTE, CAUTION and WARNING.***

Some illustrations may show components that differ from your engine. This is the result of ongoing improvements to the engine design.

Notes:

ENGINE TOP END DISASSEMBLY

A

TABLE OF CONTENTS FOR SECTION 'A'

SECTION TITLE **PAGE NO.**

ENGINE TOP END....A-1
Tool List....A-1

CYLINDER HEAD....A-1
Remove Cylinder Head....A-1

VALVES....A-2
Remove Valve Mechanism....A-2

SPECIFICATIONS....A-3

EXPLODED VIEW....A-4

LIST OF ILLUSTRATIONS

Fig. 1 Cylinder Head....A-4

ENGINE TOP END DISASSEMBLY

Notes:

ENGINE TOP END DISASSEMBLY

A

ENGINE TOP END

Tool List **Qty. Required**

Compression Gauge, 20 kgf/cm²:

E-Z-GO Part No. N/A 1

Valve Seat Cutter, 45° - 32:

E-Z-GO Part No. 608665 1

Valve Seat Cutter, 45° - 35:

E-Z-GO Part No. 608666 1

Valve Seat Cutter, 32° - 35:

E-Z-GO Part No. 608667 1

Valve Seat Cutter, 32° - 38.5:

E-Z-GO Part No. 608668 1

Valve Seat Cutter Holder, 7:

E-Z-GO Part No. 608669 1

Valve Seat Cutter Holder Bar:

E-Z-GO Part No. 608670 1

Compression Gauge Adapter, M14 × 1.25:

E-Z-GO Part No. N/A 1

NOTE

Keep your work area clean and well organized while performing the operations described in this manual. This will help prevent accidents and reduce the possibility of mistakes that could damage or impair the performance of the engine.

NOTE

Crankshaft and balancer shaft bearings should be cleaned and inspected, and removed only if they appear to be damaged or excessively worn. Remove bearings that are pitted, nicked, burred, discolored or that rotate roughly or noisily.

⚠ CAUTION

Because some mating parts with wear surfaces were machined together when the engine was manufactured, or have established wear patterns during operation, the reassembly of engine parts in their original positions and orientations, with their original mating parts, is critical to the performance and life expectancy of the engine. Mark and sort all parts as they are disassembled so that they will be reassembled and installed in their original positions.

CYLINDER HEAD

Remove Cylinder Head

A. Several components must be removed in order to gain access to the cylinder head (for example carburator and exhaust). Refer to the service manual of your vehicle for removal procedures.

B.

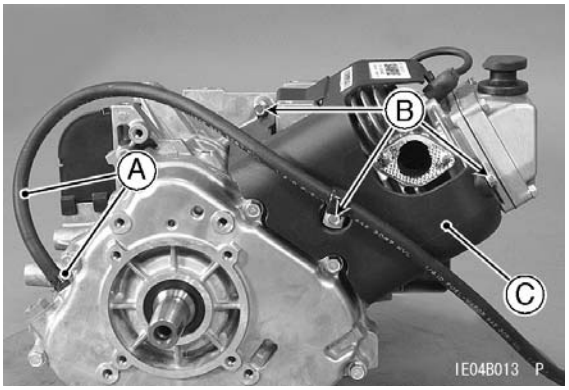

Remove clamp and hose [A], bolts [B], and engine shroud [C].

C.

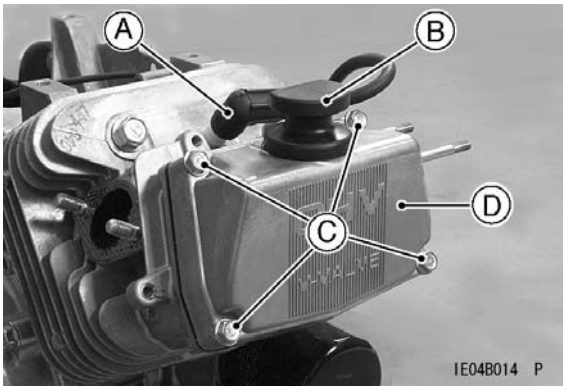

Remove spark plug cap [A], dipstick [B], valve cover bolts [C], and valve cover [D].

D. Position the crankshaft at TDC of the end of the compression stroke.

E.

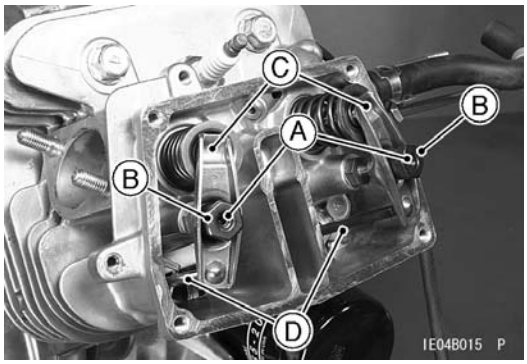

Loosen lock screws [A].

NOTE

Tag and mark push rods during removal. Push rods should be installed in their original orientation and position during assembly.

Remove valve clearance adjusting nuts [B], rocker arms [C], and push rods [D].

F.

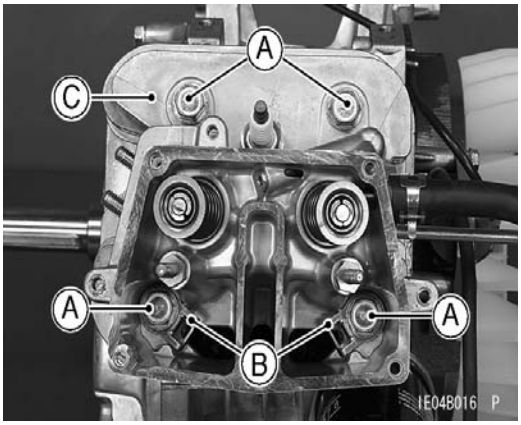

NOTE

The cylinder head may be held in place by the gasket during removal. Pry tabs are located on the cylinder head to allow the head to be removed without damaging the fins. Do not pry on the cylinder head fins during removal. Damage to the fins will occur if they are used as pry points.

Remove cylinder head bolts [A], push rod guides [B], and cylinder head [C].

VALVES

Remove Valve Mechanism

A. Remove cylinder head (see Remove Cylinder Head).

B. Support the valve head in the combustion chamber with a folded shop towel.

C.

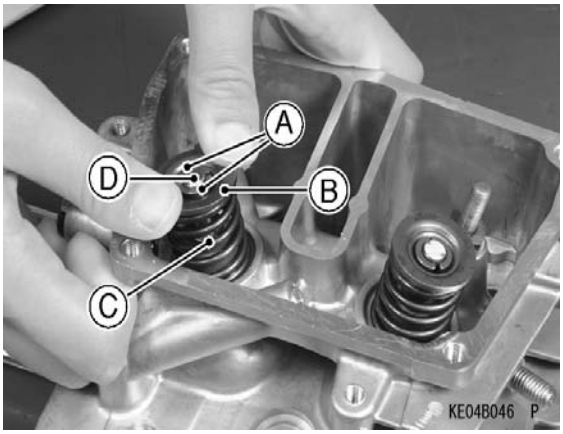

WARNING

Wear eye protection while removing collets. Valve springs are under tension and may propel collets during removal, causing injury to eyes.

To remove the collets [A], push down the valve retainer [B] with thumbs and remove the collets.

D. Remove the valve retainer, spring [C], and valve [D].

NOTE

It is not necessary to remove the stem seal unless it is being replaced.

Stem seals should be replaced during a top end overhaul.

Valve guide [B] is not replaceable; do not remove it.

E.

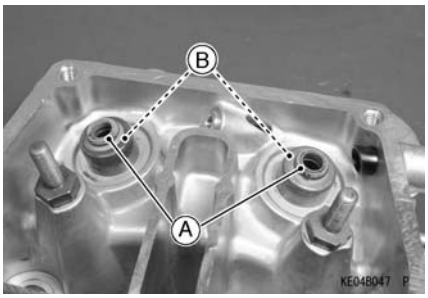

Remove the stem seals [A].

SPECIFICATIONS

Item	Standard	Service Limit
Cylinder Head		
Cylinder Compression	880 ~ 1 080 kPa (9 ~ 11 kgf/cm², 128 ~156 psi) @ 500 ~ 700 r/min (rpm)	— — —
Rocker Arm Push Rod Runout	— — —	TIR 0.5 mm (0.02 in.)
Cylinder Head Warp	— — —	0.03 mm (0.001 in.)
Valves		
Valve Clearance (when cold)	0.10 ~ 0.15 mm (0.0039 ~ 0.0059 in.)	— — —
Valve Seating Surface:		
Outside Diameter:		
Inlet	32.8 mm (1.29 in.)	— — —
Exhaust	27.6 mm (1.09 in.)	— — —
Width:		
Inlet	1.1 ~ 1.7 mm (0.043 ~ 0.067 in.)	— — —
Exhaust	1.0 ~ 1.5 mm (0.039 ~ 0.059 in.)	— — —
Valve Seat Cutting Angle	45°	— — —
Valve Spring Free Length	35 mm (1.38 in.)	32.6 mm (1.28 in.)
Valve Head Thickness	0.4 mm (0.016 in.)	0.4 mm (0.016 in.)
Valve Stem Bend	Less than 0.01 mm (0.0004 in.) TIR	TIR 0.05 mm (0.0020 in.)
Valve Stem Diameter:		
Inlet	6.960 ~ 6.975 mm (0.2740 ~ 0.2746 in.)	6.95 mm (0.274 in.)
Exhaust	6.945 ~ 6.960 mm (0.2734 ~ 0.2740 in.)	6.93 mm (0.273 in.)
Valve Guide Inside Diameter	7.000 ~ 7.015 mm (0.2756 ~ 0.2762 in.)	7.08 mm (0.279 in.)
Valve/guide Clearance (wobble method):		
Inlet	0.06 ~ 0.13 mm (0.0024 ~ 0.0051 in.)	0.29 mm (0.011 in.)
Exhaust	0.10 ~ 0.17 mm (0.0039 ~ 0.0067 in.)	0.33 mm (0.013 in.)

ENGINE TOP END DISASSEMBLY

Exploded View

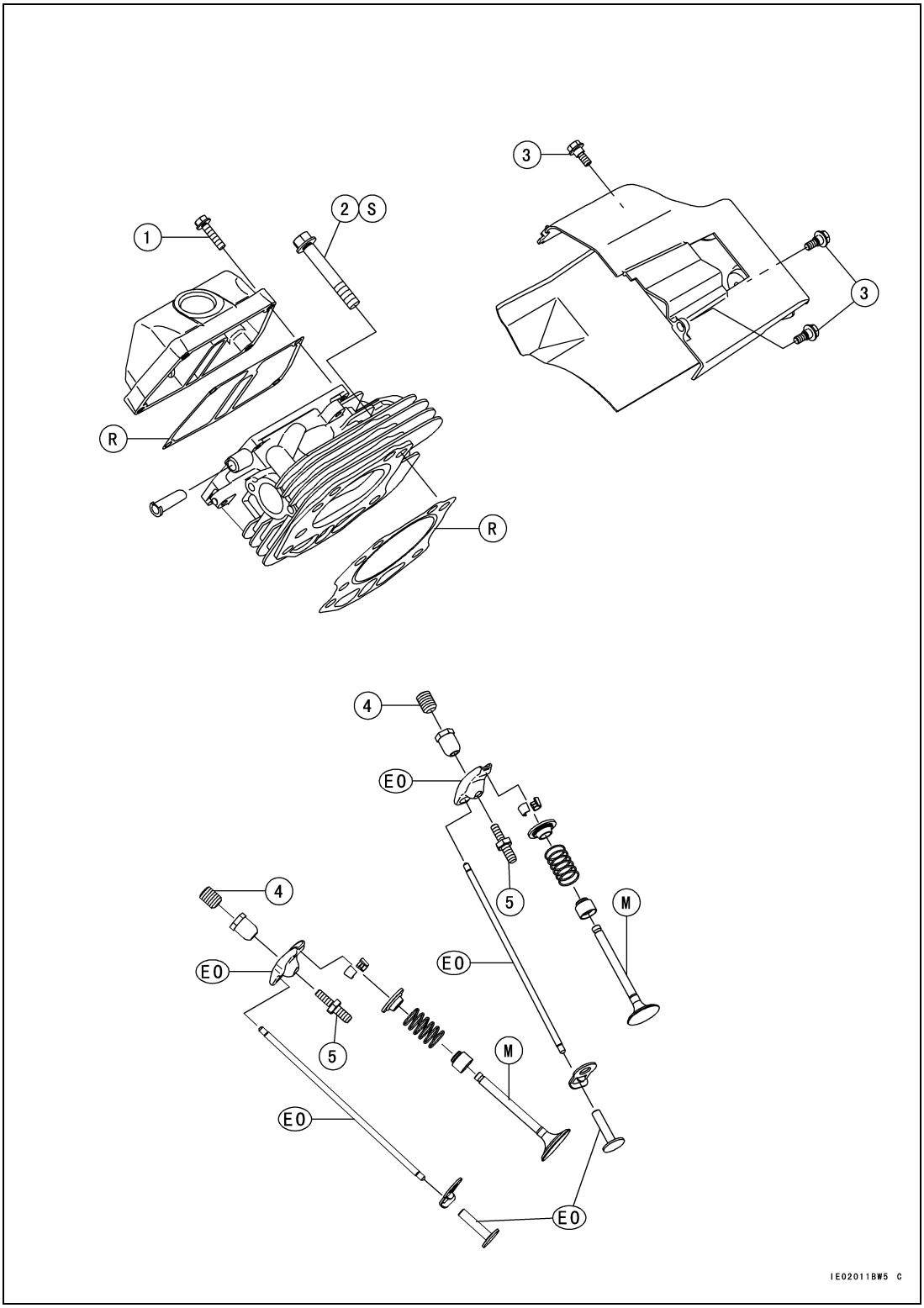

Fig. 1 Cylinder Head

No.	E-Z-GO Part No.	Fastener	Torque			Remarks
			N•m	kgf/m	ft-lb/in-lb	
1	603523	Cylinder Head Cover Bolts	6.9	0.70	61 in-lb	
2	603525	Cylinder Head Bolts	37	3.8	27 ft-lb	S
3	603570	Engine Shroud Bolts	5.9	0.60	52 in-lb	
4	603545	Valve Adjusting Nut Lock Screws	6.9	0.70	61 in-lb	
5	603549	Rocker Arm Bolts	28	2.9	21 ft-lb	

EO: Apply engine oil.
M: Apply molybdenum disulfide grease.
R: Replacement Parts
S: Follow the specific tightening sequence.

Notes:

ENGINE BOTTOM END DISASSEMBLY

B

TABLE OF CONTENTS FOR SECTION 'B'

SECTION TITLE **PAGE NO.**

ENGINE BOTTOM END....B-1
Tool List....B-1

CRANKCASE....B-1
Remove Crankcase Cover....B-1

CAMSHAFT AND TAPPETS....B-1
Remove Camshaft, Tappet....B-1

CYLINDERS AND PISTONS....B-2
Remove Piston....B-2

CRANKSHAFT AND CONNECTING RODS....B-3
Remove Connecting Rod....B-3
Remove Crankshaft....B-3

BALANCER SHAFT....B-3
Remove Balancer Shaft....B-3

BREATHER VALVE....B-3
Remove Breather Valve....B-3

SPECIFICATIONS....B-4

EXPLODED VIEW....B-6

LIST OF ILLUSTRATIONS

Fig. 1 Crankcase....B-6

ENGINE BOTTOM END DISASSEMBLY

Notes:

ENGINE BOTTOM END

Tool List	Qty. Required
Piston Ring Compressor Grip: E-Z-GO Part No. N/A	1
Piston Ring Compressor Belt, 80 ~ 91: E-Z-GO Part No. N/A	1
Bearing Driver Set: E-Z-GO Part No. N/A	1

NOTE

Use clutch puller bolt E-Z-GO Part No. 608429 to remove the drive clutch if it has not yet been removed from the PTO of the crankshaft.

CRANKCASE

Remove Crankcase Cover

A. Drain the engine oil.

NOTE

If the crankcase cover sticks, tap lightly with a wooden or plastic mallet near the dowel pins [C].

B.

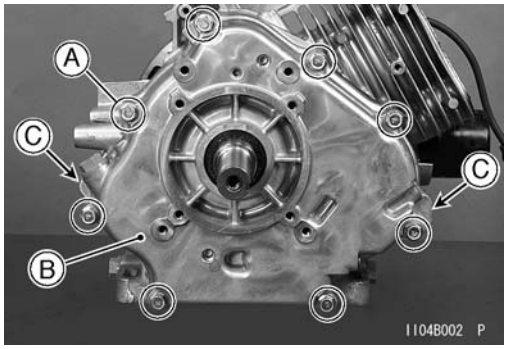

C. Remove crankcase cover bolts [A] and crankcase cover [B].

CAMSHAFT AND TAPPETS

Remove Camshaft, Tappet

A. Drain the engine oil.

B. Remove crankcase cover (see Remove Crankcase Cover).

C.

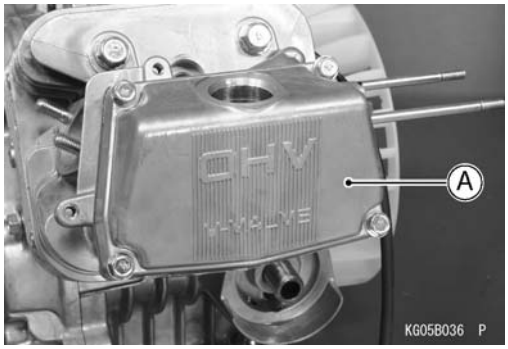

Remove valve cover [A].

D. Position the piston TDC at the end of the compression stroke.

E.

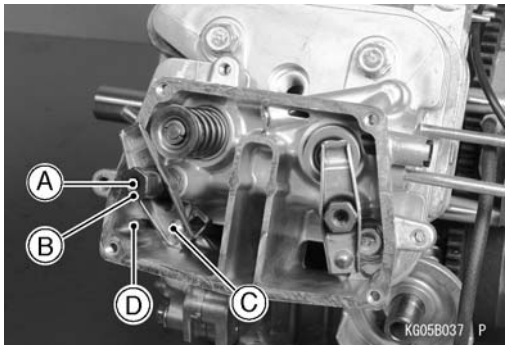

Remove the lock screws [A] and the valve clearance adjusting nuts [B], which fasten the rocker arm [C], and pull the rocker arm off the push rods [D].

F. Remove the push rods and mark them so they can be installed in their original positions during assembly.

G.

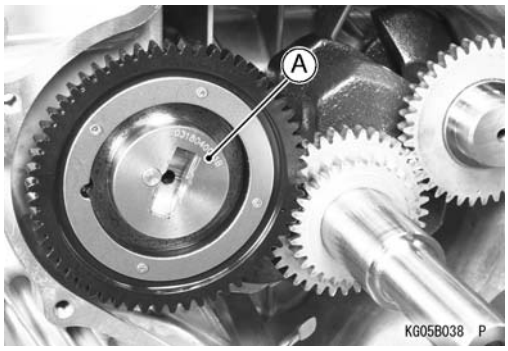

Pull the camshaft [A] out of the crankcase.

H.

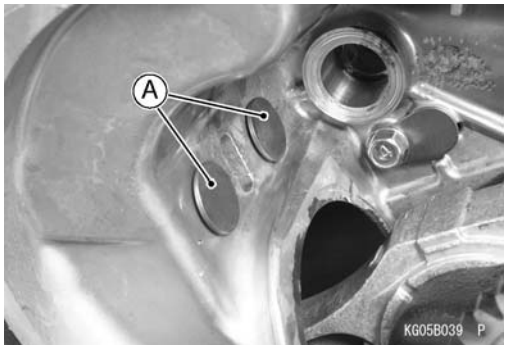

Remove the tappets [A] and mark them so they can be installed in their original positions during assembly.

CYLINDERS AND PISTONS

Remove Piston

A. Remove crankcase cover (see Remove Crankcase Cover), camshaft (see Remove Camshaft, Tappet Removal), and balancer shaft (see Remove Balancer Shaft).

B.

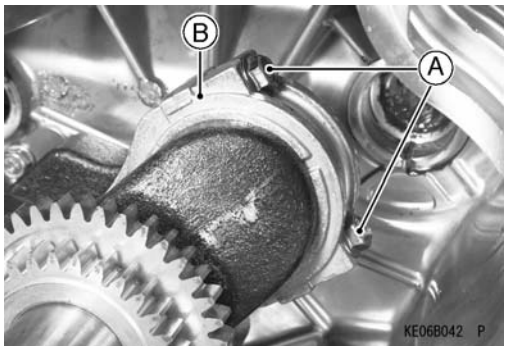

Turn the crankshaft to expose the connecting rod cap bolts [A].

C. Remove the bolts and take off the connecting rod cap [B].

NOTE

Note the position of the connecting rod cap for reinstalling the cap.

D. Push the connecting rod end into the cylinder, and pull the piston and connecting rod out of the cylinder.

E.

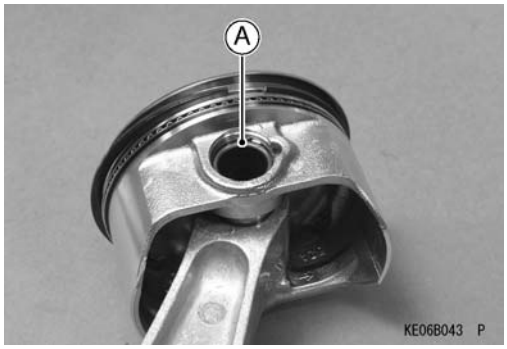

Remove one of the piston pin snap rings [A] with needle nose pliers.

F.

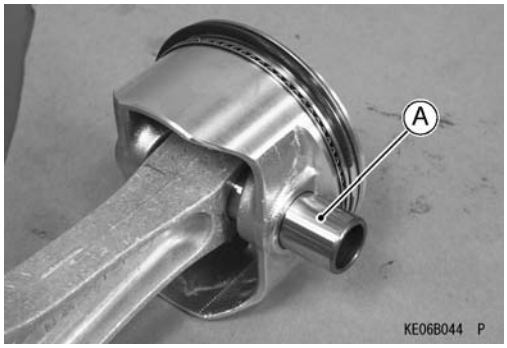

Remove the piston by pushing the piston pin [A] out the side from which the snap ring was removed.

G.

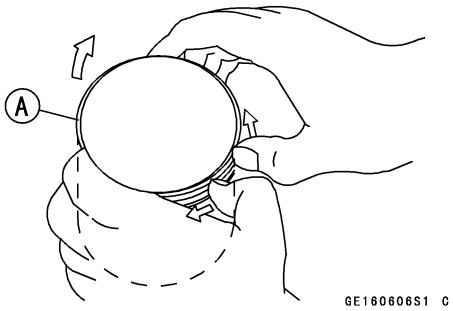

Carefully spread the ring opening with your thumbs and then push up on the opposite side of the ring [A] to remove it.

H. Remove the 3-piece oil ring with your thumbs in the same manner.

CRANKSHAFT AND CONNECTING RODS

Remove Connecting Rod

A. Refer to Remove Piston.

Remove Crankshaft

A. Drain the engine oil.

B. Remove alternator rotor, camshaft (see Remove Camshaft, Tappet), balancer shaft (see Remove Balancer Shaft), and connecting rod cap (see Remove Piston).

C.

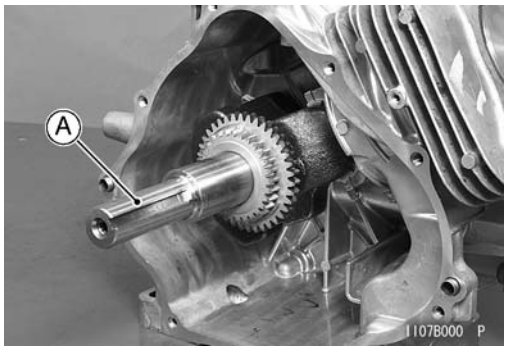

Pull the crankshaft [A] out of the crankcase. Tap gently with a wooden or plastic mallet if necessary to loosen the crankshaft.

BALANCER SHAFT

Remove Balancer Shaft

A.

Remove crankcase cover (see Remove Crankcase Cover) and balancer shaft [A].

BREATHER VALVE

Remove Breather Valve

The function of the breather is to create a negative pressure in the crankcase, which prevents oil from being forced out of the engine through the piston rings, oil seals or gaskets. A sealed-type crankcase emission control system is used to prevent blow-by gases from emitting in the air. The blow-by gases are drawn into the clean side of the air cleaner through the crankcase and the cylinder head and mixed with the clean airflow, and subsequently come into the combustion chamber through the carburetor. Oil is primarily separated from the gases while passing through the inside of the rocker chamber from the crankcase, and secondly separated from the gases in the breather chamber, and then brought back to the crankcase.

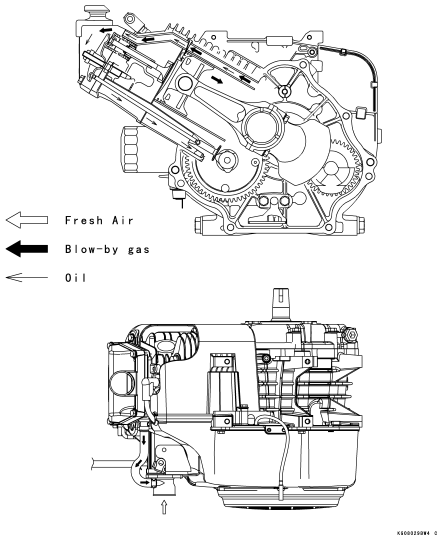

A. Remove the cylinder head assembly (see Remove Cylinder Head in Section A).

B.

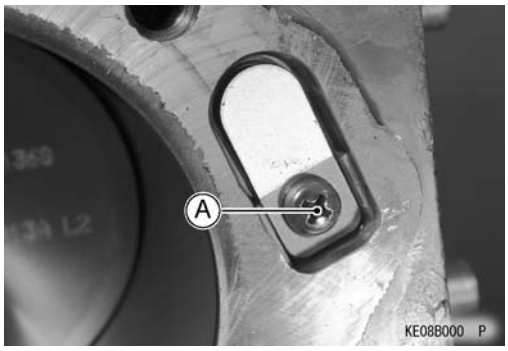

Unscrew the breather valve screw [A].

SPECIFICATIONS

Item	Standard	Service Limit
Camshaft and Tappets		
Cam Lobe Height:		
Inlet	29.95 ~ 30.05 mm	29.86 mm
	(1.179 ~ 1.183 in.)	(1.176 in.)
Exhaust	29.95 ~ 30.05 mm	29.86 mm
	(1.179 ~ 1.183 in.)	(1.176 in.)
Camshaft Journal Diameter:		
Crankcase Side	19.967 ~ 19.980 mm	19.94 mm
	(0.78610 ~ 0.78661 in.)	(0.7850 in.)
Crankcase Cover Side	49.959 ~ 49.975 mm	49.93 mm
	(1.9669 ~ 1.9675 in.)	(1.966 in.)
Camshaft Bearing Inside Diameter:		
Crankcase Side	20.000 ~ 20.013 mm	20.07 mm
	(0.78740 ~ 0.78791 in.)	(0.7902 in.)
Crankcase Cover Side	50.000 ~ 50.025 mm	50.09 mm
	(1.9685 ~ 1.9695 in.)	(1.972 in.)
Crankshaft and Connecting Rods		
Connecting Rod Bend	– – –	0.15/100 mm
	– – –	(0.006/3.94 in.)
Connecting Rod Twist	– – –	0.15/100 mm
	– – –	(0.006/3.94 in.)
Connecting Rod Big End Width	27.4 ~ 27.7 mm	27.0 mm
	(1.08 ~ 1.09 in.)	(1.06 in.)
Crankpin Width	28.0 ~ 28.2 mm	28.4 mm
	(1.10 ~ 1.11 in.)	(1.12 in.)
Connecting Rod Big End Inside Diameter	43.004 ~ 43.015 mm	43.04 mm
	(1.6931 ~ 1.6935 in.)	(1.694 in.)
Crankpin Outside Diameter	42.963 ~ 42.976 mm	42.95 mm
	(1.6915 ~ 1.6920 in.)	(1.691 in.)
Crankshaft Runout	TIR 0.02 mm	TIR 0.05 mm
	(0.0008 in.) or less	(0.002 in.)
Crankshaft Main Journal Diameter:		
Crankcase Side	34.955 ~ 34.980 mm	34.93 mm
	(1.3762 ~ 1.3772 in.)	(1.375 in.)
Crankshaft Main Bearing Inside Diameter:		
Crankcase Side	35.002 ~ 35.015 mm	35.05 mm
	(1.3780 ~ 1.3785 in.)	(1.380 in.)

Item	Standard	Service Limit
Cylinder and Piston		
Piston Ring/Groove Clearance:		
Top, Second	0.04 ~ 0.08 mm	0.18 mm
Piston Ring Thickness:	(0.002 ~ 0.003 in.)	(0.0071 in.)
Top, Second	1.47 ~ 1.49 mm	1.40 mm
	(0.0579 ~ 0.0587 in.)	(0.0551 in.)
Piston Ring End Gap:		
Top	0.15 ~ 0.40 mm	0.7 mm
	(0.0059 ~ 0.016 in.)	(0.03 in.)
Second	0.23 ~ 0.48 mm	0.8 mm
	(0.0091 ~ 0.019 in.)	(0.03 in.)
Oil	0.25 ~ 0.75 mm	1.0 mm
	(0.0098 ~ 0.030 in.)	(0.039 in.)
Piston Pin Outside Diameter	18.995 ~ 19.000 mm	18.96 mm
	(0.74783 ~ 0.74803 in.)	(0.7465 in.)
Piston Pin Hole Inside Diameter	19.004 ~ 19.015 mm	19.08 mm
	(0.74819 ~ 0.74862 in.)	(0.7512 in.)
Connecting Rod Small End Inside Diameter	19.010 ~ 19.021 mm	19.06 mm
	(0.74842 ~ 0.74886 in.)	(0.7504 in.)
Piston Diameter	81.935 ~ 81.955 mm	81.79 mm
	(3.2258 ~ 3.2266 in.)	(3.220 in.)
Cylinder Inside Diameter	81.97 ~ 81.99 mm	82.10 mm
	(3.227 ~ 3.228 in.)	(3.232 in.)
Cylinder Bore Out-Round	– – –	0.05 mm
	– – –	(0.002 in.)
Piston/Cylinder Clearance	0.015 ~ 0.055 mm	– – –
	(0.00059 ~ 0.0022 in.)	– – –
Balancer Shaft		
Balancer Shaft Journal Diameter	31.959 ~ 31.975 mm	31.935 mm
	(1.2582 ~ 1.2589 in.)	(1.2573 in.)
Balancer Shaft Bearing Inside Diameter:		
Crankcase Side	32.000 ~ 32.016 mm	32.06 mm
	(1.2598 ~ 1.2605 in.)	(1.262 in.)
Crankcase Cover Side	32.000 ~ 32.016 mm	32.06 mm
	(1.2598 ~ 1.2605 in.)	(1.262 in.)

ENGINE BOTTOM END DISASSEMBLY

Exploded View

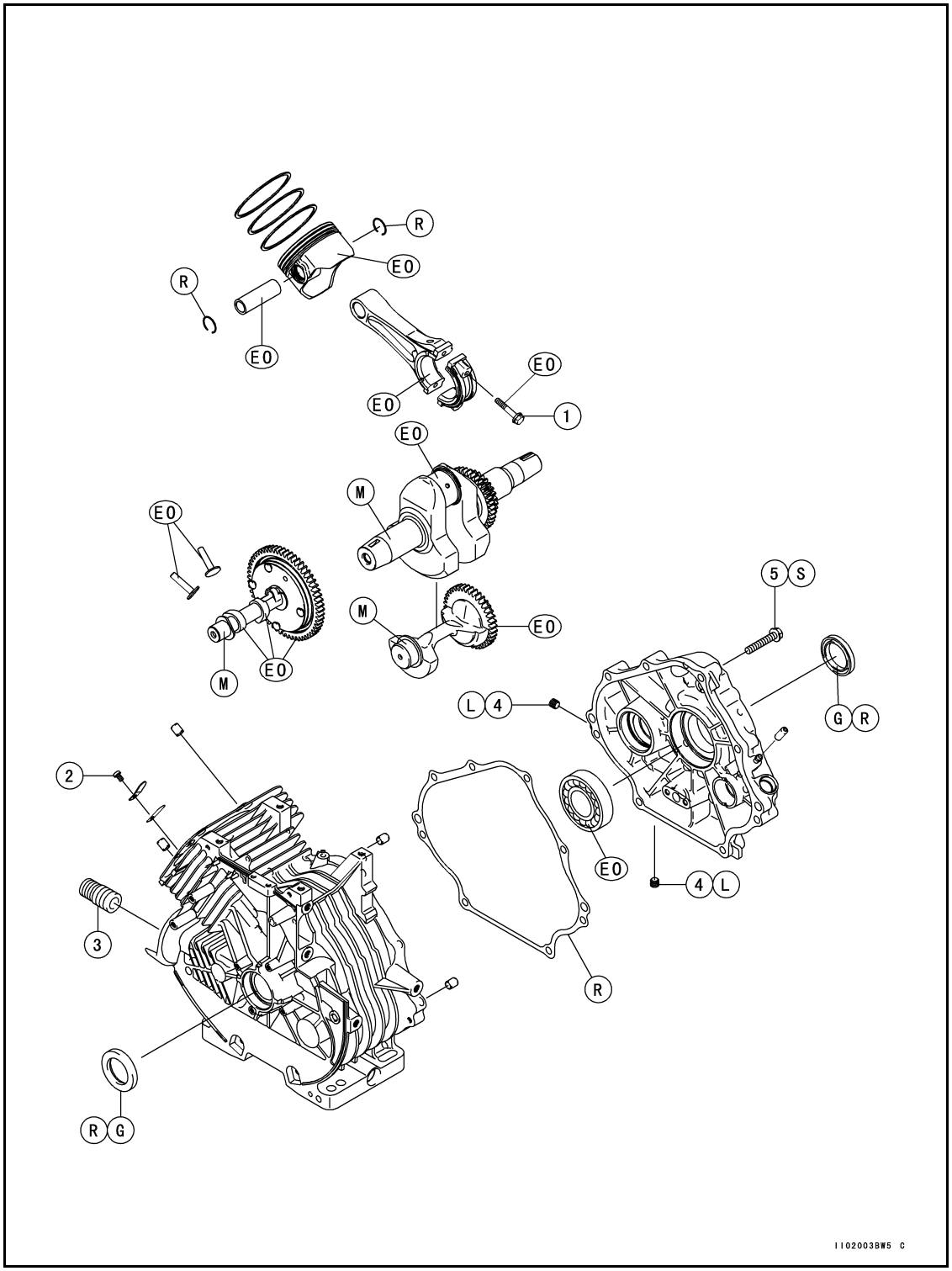

Fig. 1 Crankcase

No.	E-Z-GO Part No.	Fastener	Torque			Remarks
			N•m	kgf/m	ft-lb/in-lb	
1	603535	Connecting Rod Big End Cap Bolts	5.9	0.60	52 in-lb	EO
2	603526	Breather Valve Screw	37	0.35	30 in-lb	
3	603518*	Oil Filter Joint	6.9	0.70	61 in-lb	
4	603522	Oil Line Plugs	3.9	0.40	34 in-lb	L
5	603524	Crankcase Cover Bolts	22	2.2	16 ft-lb	S

* with crankcase
EO: Apply engine oil.
G: Apply grease.
L: Apply a non-permanent locking agent.
M: Apply molybdenum disulfide grease.
R: Replacement Parts
S: Follow the specific tightening sequence.

Notes:

TABLE OF CONTENTS FOR SECTION 'C'

SECTION TITLE **PAGE NO.**

ENGINE MEASUREMENTS AND SPECIFICATIONS C-1
Tool List C-1
Using Telescoping Gauges and Hole Gauges C-1

CYLINDER HEAD C-1
Measure Cylinder Compression C-1
Inspect Push Rod C-3
Inspect Rocker Arm C-3
Measure Cylinder Head Warp C-3

VALVES C-4
Inspect Valve Clearance C-4
Adjust Valve Clearance C-4
Inspect Valve Seat C-4
Repair Vavle Seat C-4
Operating Procedures C-5
Measure Valve Spring Free Length C-8
Measure Vavle Head Thickness C-8
Measure Valve Stem Bend C-8
Measure Valve Stem Diameter C-9
Measure Valve Guide Inside Diameter C-9
Measure Valve/Guide Clearance (Wobble Method) C-9

CAMSHAFT AND TAPPETS C-10
Measure Camshaft Bearing/Journal Wear C-10

CYLINDER AND PISTONS C-11
Clean Piston C-11
Check Piston Ring and Ring Groove Wear C-11
Measure Piston Ring End Gap C-12
Measure Piston Pin, Piston Pin Hole, and Connecting Rod Wear C-13
Measure Piston Diameter C-13
Check Cylinder Inside Diameter C-14

CRANKSHAFT AND CONNECTING RODS C-14
Clean/Inspect C-14
Measure Connecting Rod Bend/Twist C-14
Measure Connecting Rod Big End/Crankpin Width Wear C-15
Measure Connecting Rod Big End Bearing/Crankpin Wear C-15
Measure Crankshaft Runout C-16
Measure Crankshaft Main Bearing/Journal Wear C-16

BALANCER SHAFT C-17
Measure Balancer Shaft Bearing/Journal Wear C-17

BREATHER VALVE C-17
Inspect Breather Valve C-17

Notes:

ENGINE MEASUREMENTS AND SPECIFICATIONS

Tool List **Qty. Required**

Compression Gauge, 20 kgf/cm²:
E-Z-GO Part No. N/A 1

Compression Gauge Adapter, M14 × 1.25:
E-Z-GO Part No. N/A 1

Valve Seat Cutter, 45° - 35
E-Z-GO Part No. 608666 1

Valve Seat Cutter, 32° - 38.5
E-Z-GO Part No. 608668 1

Valve Seat Cutter, 45° - 32
E-Z-GO Part No. 608665 1

Valve Seat Cutter, 32° - 35
E-Z-GO Part No. 608667 1

Valve Seat Cutter Holder, 7
E-Z-GO Part No. 608669 1

Valve Seat Cutter Holder Bar
E-Z-GO Part No. 608670 1

CAUTION

All engine parts must be thoroughly cleaned, and free of all dirt, oil, grease, carbon deposits or residue of any kind before beginning this section. It is especially important that your work area be clean and well organized while performing the operations described in this section.

NOTE

In some cases, time may be saved by setting measuring instruments at limit specifications and using them as "go-no-go" fixtures. Check preset instrument fit in bores, on shafts, etc. to determine part acceptability. We recommend that parts bound to be acceptable but near limits be replaced if the engine will see high usage.

NOTE

Check micrometers for proper calibration before beginning the operations described in this section.

Using Telescoping Gauges and Hole Gauges

Telescoping gauges and hole gauges are "transfer-type" measuring instruments. They are not calibrated and are used to record a distance, which is then transferred to a micrometer for measurement.

Position the gauge in the hole or bore and "set" the telescoping arms or ball to its true diameter. Make sure that the handle of the gauge is in line with the centerline of the hole or bore.

Lock and remove the gauge. Measure its setting with a micrometer.

CYLINDER HEAD

Measure Cylinder Compression

A. Thoroughly warm up the engine so that the engine oil between the piston and the cylinder wall will help seal compression as it does during normal running.

B.

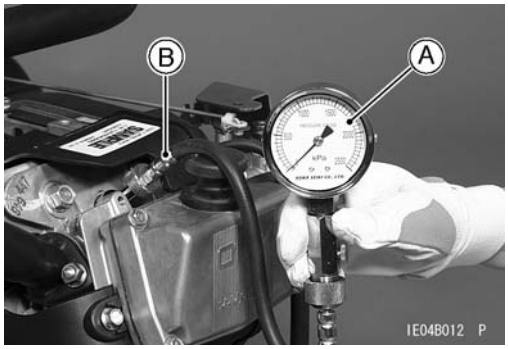

Stop the engine, remove the spark plug, and attach a compression gauge [A] firmly into the spark plug hole [B].

Special Tools
Compression Gauge, 20 kgf/cm²
E-Z-GO Part No. N/A

Compression Gauge Adapter, M14 × 1.25 [B]
E-Z-GO Part No. N/A

C. Using the starter, turn the engine over with the throttle fully open until the compression gauge stops rising; this is the highest compression reading obtainable.

Cylinder Compression

Usable Range: 880 ~ 1 080 kPa (9 ~ 11 kgf/cm², 128 ~ 156 psi) @500 ~ 700 r/min (rpm)

The following table should be consulted if the obtainable compression reading is not within the usable range.

Problem	Diagnosis	Remedy (Action)
Cylinder compression higher than usable range	Carbon accumulation on piston and cylinder head, and in combustion chamber possibly due to damaged valve stem oil seal and/or damaged piston oil rings	Remove the carbon deposits and replace damaged parts if necessary.
	Incorrect cylinder head gasket thickness	Replace with a gasket of the proper thickness.
Cylinder compression lower than usable range	Gas leakage around cylinder head	Replace damaged gasket and check cylinder head warp.
	Bad condition of valve seating	Repair if possible.
	Incorrect valve, piston/cylinder clearance	Adjust.
	Piston seizure	Inspect cylinder and liner and replace/repair as necessary.
	Bad condition of piston ring and/or piston ring grooves	Replace.

Inspect Push Rod

A.

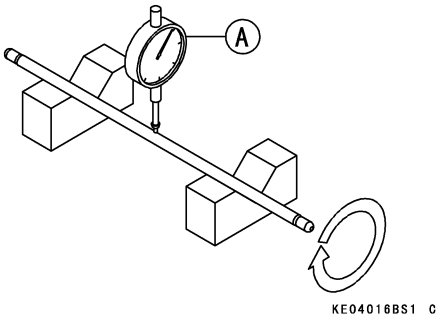

Place the rocker arm push rod on V blocks that are as far apart as possible, and set a dial gauge [A] on the rod at a point halfway between the blocks. Turn the rod to measure the runout. The difference between highest and the lowest dial readings is the amount of runout.

B. If the runout exceeds the service limit, replace the rod.

Rocker Arm Push Rod Runout

Service Limit: TIR 0.5 mm (0.02 in.)

Inspect Rocker Arm

A.

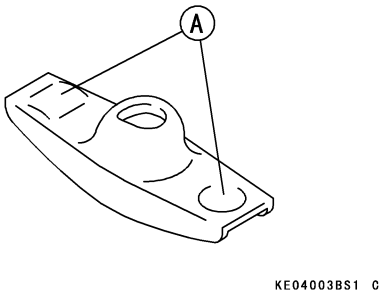

Clean and inspect the rocker arm where it touches the push rod and valve stem.

B. If the contact points [A] are worn or damaged, replace the rocker arm.

Measure Cylinder Head Warp

A.

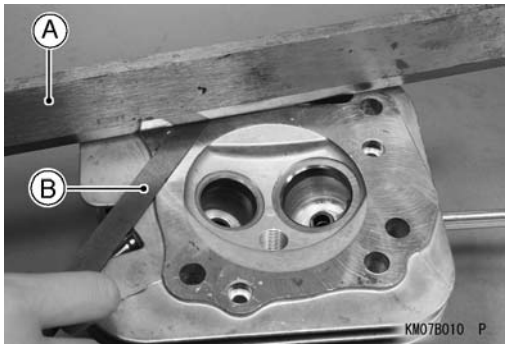

Lay a straightedge [A] across the lower surface of the head at several different points, and measure warp by inserting a thickness gauge [B] between the straightedge and the head.

B. If warp exceeds the service limit, repair the mating surface. Replace the cylinder head if the mating surface is badly damaged.

Cylinder Head Warp

Service Limit: 0.03 mm (0.001 in.)

VALVES

Inspect Valve Clearance

A. Refer to the Specifications table in Section A.

Adjust Valve Clearance

A. Refer to the Specifications table in Section A.

Inspect Valve Seat

A. Remove the valve. See Remove Valve Mechanism in Section A.

B.

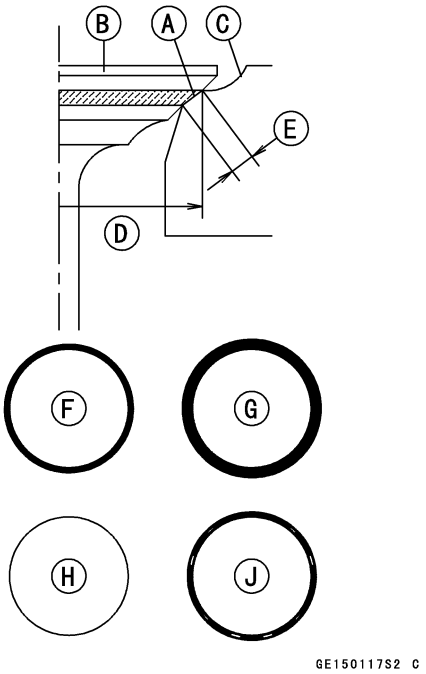

Check the valve seating surface [A] between the valve [B] and valve seat [C].

C. Coat the valve seat with machinist's dye.

D. Push the valve into the guide.

E. Rotate the valve against the seat with a lapping tool.

F. Pull the valve out, and check the seating pattern on the valve head. It must be the correct width and even all the way around.

NOTE

The valve stem and guide must be in good condition, or this check will not be valid.

G. If the valve seating pattern is not correct, repair the seat.

H. Measure the outside diameter [D] of the seating pattern on the valve seat.

I. If the outside diameter of the valve seating pattern is too large or too small, repair the seat.

Valve Seating Surface Outside Diameter

Inlet 32.8 mm (1.29 in.)

Exhaust 27.6 mm (1.09 in.)

J. Measure the seat width [E] of the portion where there is no build-up carbon (white portion) of the valve seat with a vernier caliper.

- Good [F]
- Too Wide [G]
- Too Narrow [H]
- Uneven [J]

K. If the width is too wide, too narrow or uneven, repair the seat (see Repair Valve Seat).

Valve Seating Surface Width Standard

Inlet 1.1 ~ 1.7 mm (0.043 ~ 0.067 in.)

Exhaust 1.0 ~ 1.5 mm (0.039 ~ 0.059 in.)

Repair Valve Seat

A. Follow the manufacturer's instructions for use of valve seat cutters.

Special Tools

Valve Seat Cutter, 45° - 35
E-Z-GO Part No. 608666

Valve Seat Cutter, 32° - 38.5
E-Z-GO Part No. 608668

Valve Seat Cutter, 45° - 32
E-Z-GO Part No. 608665

Valve Seat Cutter, 32° - 35
E-Z-GO Part No. 608667

Valve Seat Cutter Holder, 7
E-Z-GO Part No. 608669

Valve Seat Cutter Holder Bar
E-Z-GO Part No. 608670

If the manufacture's instructions are not available, use the following procedure:

Seat Cutter Operating Cares

1. The valve seat cutter is designed only for valve seat repair. Therefore the cutter must not be used for other purposes.
2. Do not drop or hit the valve seat cutter, or the diamond particles may fall off.
3. Do not fail to apply engine oil to the valve seat cutter before grinding the seat surface. Also, use washing oil to wash off ground particles sticking to the cutter.

NOTE

Do not use a wire brush to remove the metal particles from the cutter. It will take off the diamond particles.

4.

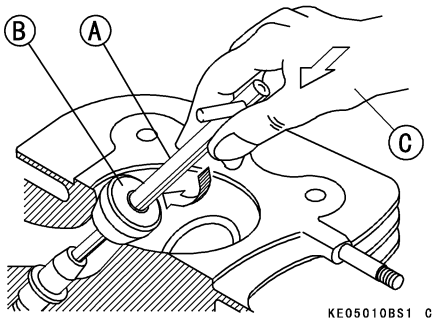

Setting the valve seat cutter holder [A] in position, operate the cutter [B] with one hand [C]. Do not apply too much force to the diamond portion.

NOTE

Prior to grinding, apply oil to the cutter, and during the operation use washing oil to wash off any ground particles sticking to the cutter.

5. After use, wash the cutter with washing oil and apply a thin layer of engine oil before storing.

Marks Stamped on the Cutter

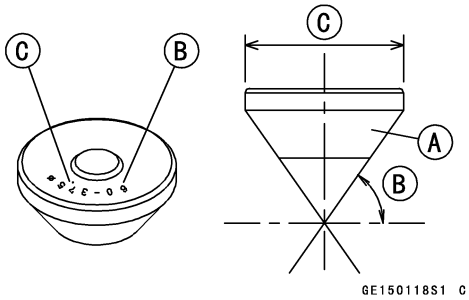

The marks stamped on the back of the cutter [A] represent the following:

60 ..... Cutter angle [B]

37.5 ..... Outer diameter of cutter [C]

Operating Procedures

A. Clean the seat area carefully.

B. Coat the seat with machinist's dye.

C. Fit a 45° cutter to the holder and slide it into the valve guide.

D. Press down lightly on the handle and turn it right or left.

E. Grind the seating surface only until it is smooth.

⚠ CAUTION

Do not grind the seat too much. Overgrinding will reduce valve clearance by sinking the valve into the head. If the valve sinks too far into the head, it will be impossible to adjust the clearance, and the cylinder head must be replaced.

F. Measure the outside diameter (O.D.) of the seating surface with a vernier caliper.

G. If the O.D. of the seating surface is too small, repeat the 45° grind until the diameter is within the specified range.

H. If the O.D. of the seating surface is too large, make the 32° grind described below.

NOTE

To make the 32° grind, fit a 32° cutter to the holder, and slide it into the valve guide.

1. Grind the seat at a 32° angle until the seat O.D. is within the specified range.
2. Turn the holder one turn at a time while pressing down very lightly. Check the seat after each turn.

CAUTION

The 32° cutter removes material very quickly.

3. Check the seat outside diameter frequently to prevent overgrinding.

I. After making the 32° grind, return to the seat O.D. measurement step above.

J. Lap the valve to the seat, once the seat width and O.D. are within the ranges specified above.

K. Put a little coarse grinding compound on the face of the valve in a number of places around the valve head.

L. Spin the valve against the seat until the grinding compound produces a smooth, matched surface on both the seat and the valve.

M. Repeat the process with a fine grinding compound.

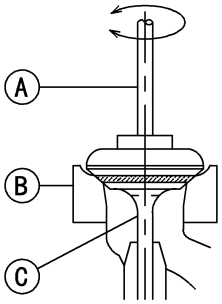

GE150120S1 C

[A] Lapping Tool

[B] Valve Seat

[C] Valve

N. The seating area should be marked about in the middle of the valve face.

O. If the seat area is not in the right place on the valve, check to be sure the valve is the correct part. If it is, it may have been refaced too much; replace it.

NOTE

Be sure to remove all grinding compound before assembly

P. When the engine is assembled, be sure to adjust the valve clearances.

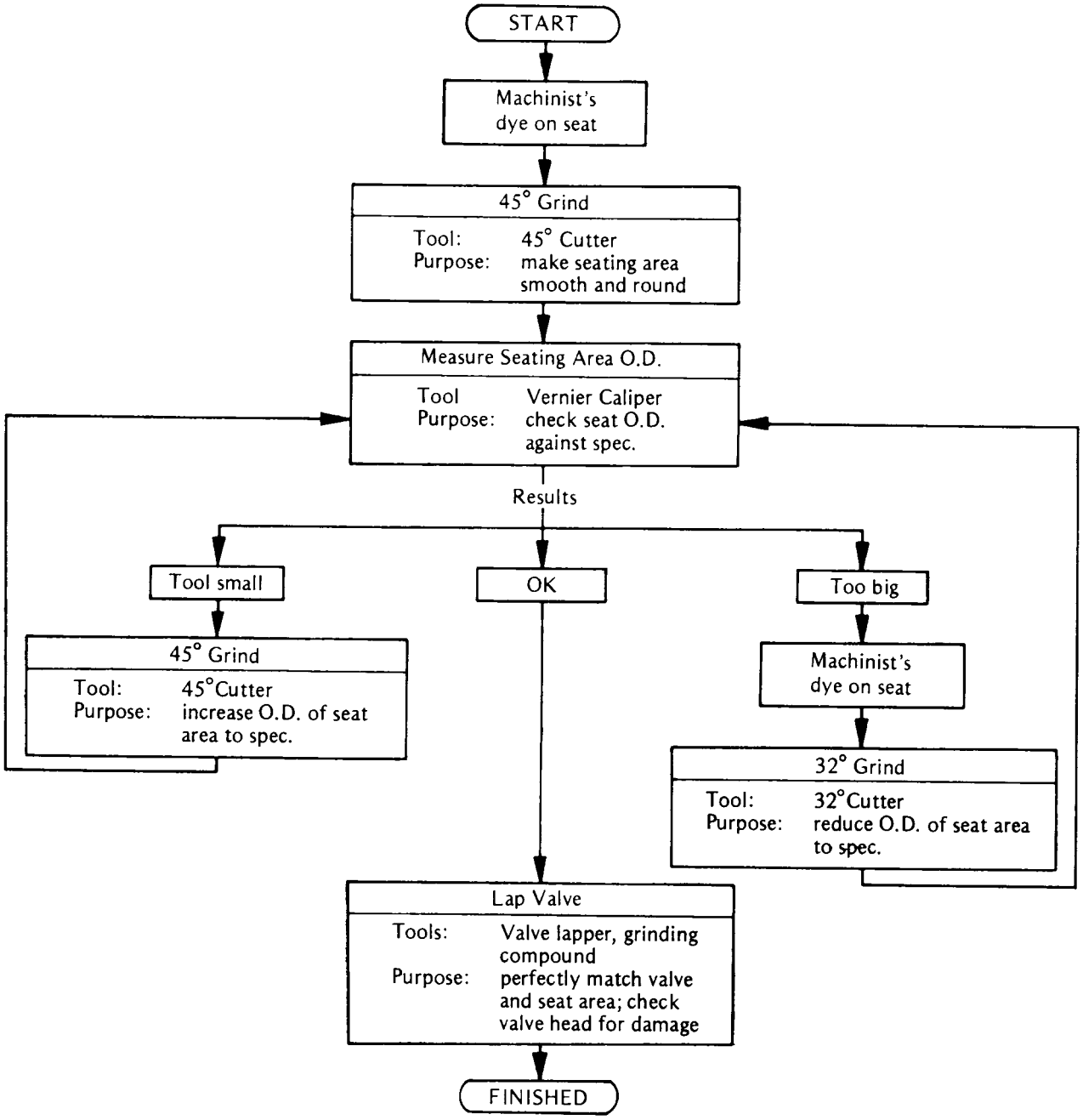
START
Machinist's dye on seat
45° Grind
Tool: 45° Cutter
Purpose: make seating area smooth and round
Measure Seating Area O.D.
Tool Vernier Caliper
Purpose: check seat O.D. against spec.
Results
Tool small
OK
Too big
45° Grind
Tool: 45°Cutter
Purpose: increase O.D. of seat area to spec.
Machinist's dye on seat
32° Grind
Tool: 32°Cutter
Purpose: reduce O.D. of seat area to spec.
Lap Valve
Tools: Valve lapper, grinding compound
Purpose: perfectly match valve and seat area; check valve head for damage
FINISHED

Measure Valve Spring Free Length

A.

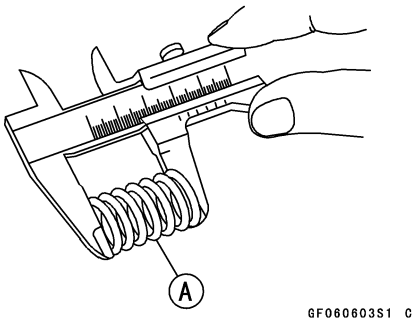

Measure the valve spring [A] free length.

B. If the free length is less than the service limit, replace the valve spring with a new one.

Valve Spring Free Length

Standard: 35 mm (1.38 in.)

Service Limit: 32.6 mm (1.28 in.)

Measure Valve Head Thickness

A.

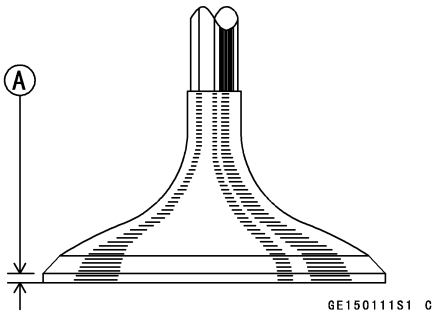

Measure the thickness [A] of the valve head.

B. If the valve head thickness is less than the service limit, replace the valve with a new one.

Valve Head Thickness

Standard: 0.4 mm (0.016 in.)

Service Limit: 0.4 mm (0.016 in.)

Measure Valve Stem Bend

A.

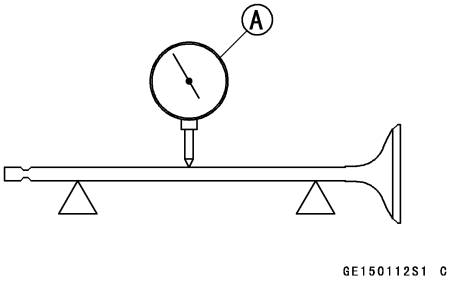

Place the valve in V blocks at each end of the stem, and set a dial gauge [A] on the stem at a point half-way between the blocks. Turn the valve to measure the bend. The difference between the highest and the lowest dial readings is the amount of bend.

B. If the valve stem bend is greater than the service limit, replace the valve with a new one.

Valve Stem Bend

Standard: Less than 0.01 mm (0.0004 in.) TIR

Service Limit: TIR 0.05 mm (0.0020 in.)

Measure Valve Stem Diameter

A.

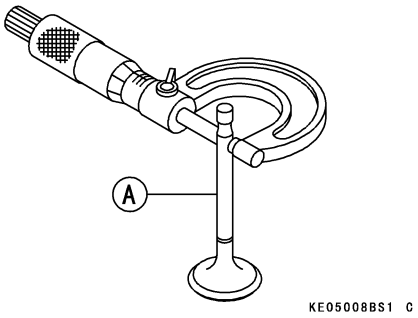

Measure the diameter of the valve stem [A] in two directions at right angles, and at four different positions on the stem.

B. If any single measurement is less than the service limit, replace the valve with a new one.

Valve Stem Diameter

Standard:

Inlet 6.960 ~ 6.975 mm (0.2740 ~ 0.2746 in.)

Exhaust 6.945 ~ 6.960 mm (0.2734 ~ 0.2740 in.)

Service Limit:

Inlet 6.95 mm (0.274 in.)

Exhaust 6.93 mm (0.273 in.)

Measure Valve Guide Inside Diameter

A.

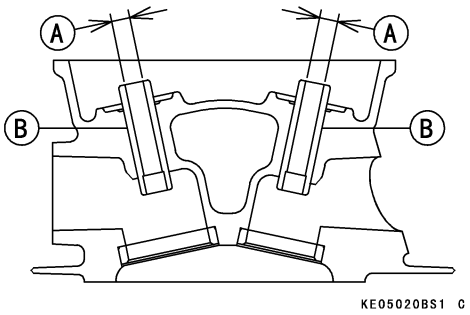

Measure the inside diameter [A] of the valve guide [B].

B. If the valve guide has worn enough to exceed the service limit, replace the cylinder head.

Valve Guide Inside Diameter

Standard: 7.000 ~ 7.015 mm (0.2756 ~ 0.2762 in.)

Service Limit: 7.08 mm (0.279 in.)

Measure Valve/Guide Clearance (Wobble Method)

A.

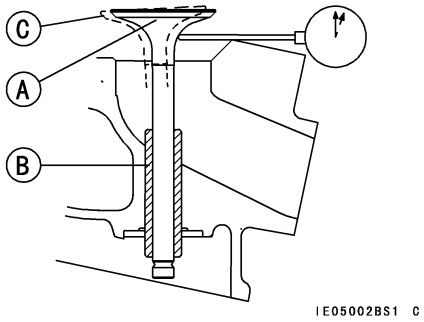

If a small bore gauge is not available, inspect the valve guide wear by measuring the valve/guide clearance with the wobble method, as indicated below.

B. Insert a new valve [A] into the guide [B] from the top of the head.

C. Set a dial gauge against the stem perpendicular to it as close as possible to the cylinder head upper surface.

D. Move the stem back and forth [C] to measure valve/guide clearance.

E. Repeat the measurement in a direction at a right angle to the first.

F. If the reading exceeds the service limit, replace the cylinder head.

NOTE

The reading is not actual valve/guide clearance because the measuring point is above the guide.

Valve/Guide Clearance (Wobble Method)

Standard:

Inlet 0.06 ~ 0.13 mm (0.0024 ~ 0.0051 in.)

Exhaust 0.10 ~ 0.17 mm (0.0039 ~ 0.0067 in.)

Service Limit:

Inlet 0.29 mm (0.011 in.)

Exhaust 0.33 mm (0.013 in.)

CAMSHAFT AND TAPPETS

Measure Camshaft Bearing/Journal Wear

A.

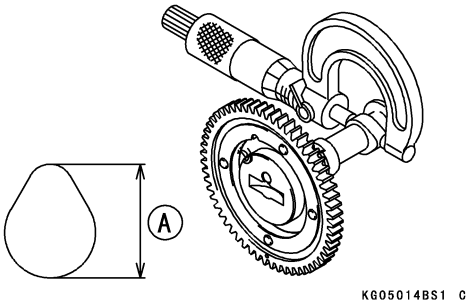

Measure the height of each cam lobe [A].

B. If the cam height is less than the service limit for either lobe, replace the camshaft.

Cam Lobe Height

Standard:

Inlet 29.95 ~ 30.05 mm (1.179 ~ 1.183 in.)

Exhaust 29.95 ~ 30.05 mm (1.179 ~ 1.183 in.)

Service Limit:

Inlet 29.86 mm (1.176 in.)

Exhaust 29.86 mm (1.176 in.)

C.

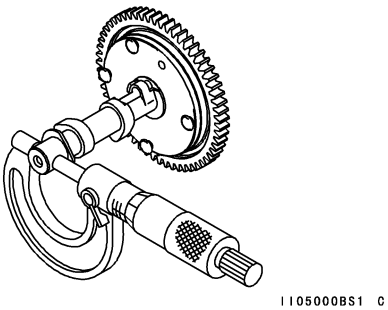

Measure both camshaft journals at several points around the journal circumference.

D. If the journal diameter is less than the service limit, replace the camshaft.

Crankcase Side Camshaft Journal Diameter

Standard: 19.967 ~ 19.980 mm (0.78610 ~ 0.78661 in.)

Service Limit: 19.94 mm (0.7850 in.)

Crankcase Cover Side Camshaft Journal Diameter

Standard: 49.959 ~ 49.975 mm (1.9669 ~ 1.9675 in.)

Service Limit: 49.93 mm (1.966 in.)

E.

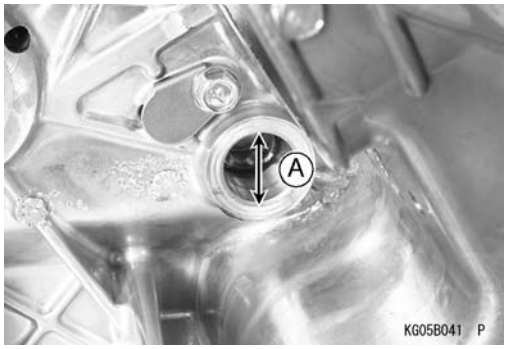

Measure the inside diameter [A] of the camshaft bearing on the crankcase at several points.

F. Replace the crankcase if the inside diameter is more than the service limit.

Camshaft Bearing Inside Diameter (Crankcase)

Standard: 20.000 ~ 20.013 mm (0.78740 ~ 0.78791 in.)

Service Limit: 20.07 mm (0.7902 in.)

G.

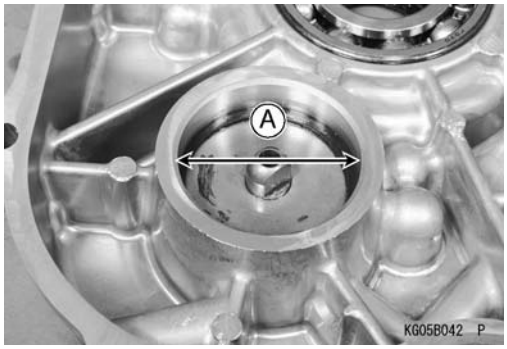

Measure the inside diameter [A] of the camshaft bearing on the crankcase cover at several points.

H. Replace the crankcase cover if the inside diameter is more than the service limit.

Camshaft Bearing Inside Diameter (Crankcase Cover)

Standard: 50.000 ~ 50.025 mm (1.9685 ~ 1.9695 in.)

Service Limit: 50.09 mm (1.972 in.)

CYLINDER AND PISTONS

Clean Piston

A. Remove the piston and piston rings (see Remove Piston in Section A).

B.

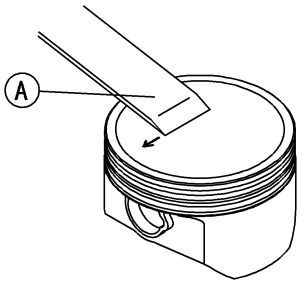

KE06037BS1 C

CAUTION

Never clean the piston head with the engine assembled. Carbon particles will fall between the piston and cylinder, and damage the crankshaft bearings.

NOTE

Use the scraping tools carefully. Do not gouge the piston head. To avoid gouging, use scrapers that are made of a material that will not cause damage.

Scrape the carbon off the piston head with a scraper [A].

C.

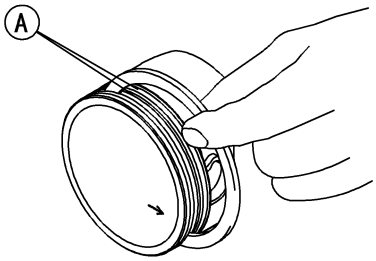

KE06038BS1 C

CAUTION

Be careful not to widen the ring grooves. Damaged ring grooves will require piston replacement.

D. Clean the piston ring grooves [A] with a broken piston ring or other suitable tools.

Check Piston Ring and Ring Groove Wear

A. Clean the piston (see Clean Piston).

Visually inspect the piston rings and ring grooves.

B. If the piston rings are worn unevenly or damaged, replace them.

C. If the ring grooves are worn unevenly or damaged, replace both the piston and piston rings.

D.

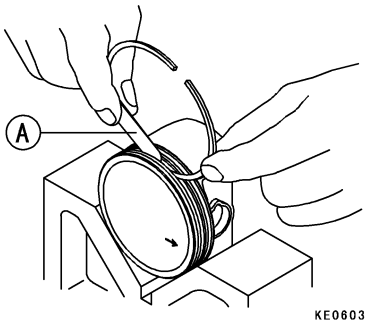

KE06039BS1 C

Measure the clearance between the top and second rings and their grooves using a thickness gauge [A].

E. If the piston ring/groove clearance is greater than the specified value, replace the piston.

Piston Ring/Groove Clearance

Standard:

Top, Second 0.04 ~ 0.08 mm (0.002 ~ 0.003 in.)

Service Limit:

Top, Second 0.18 mm (0.0071 in.)

NOTE

The oil ring is a three-piece assembled ring. It is difficult to measure the ring groove clearance and thickness; visually inspect only.

F.

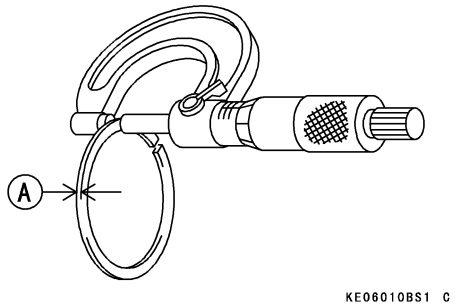

Measure the piston ring thickness [A].

G. Use a micrometer to measure at several points around the rings.

H. If any of the measurements are less than the service limit, replace the entire set of rings.

Piston Ring Thickness

Standard:

Top, Second 1.47 ~ 1.49 mm (0.0579 ~ 0.0587 in.)

Service Limit:

Top, Second 1.40 mm (0.0551 in.)

NOTE

When using new rings in a used piston, check for uneven groove wear. The rings should fit perfectly parallel to the groove sides. If not, replace the piston.

Measure Piston Ring End Gap

A. Remove the piston rings.

B. Push each ring (one at a time) into the cylinder bore to a point close to the bottom of the cylinder bore.

C. Use the piston to push it in to be sure it is square.

D.

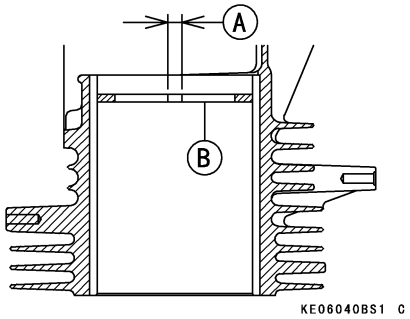

Measure the gap [A] between the ends of the ring [B] with a thickness gauge.

E. If the end gap of any ring is greater than the service limit, replace the entire set of rings.

Piston Ring End Gap

Standard:

Top 0.15 ~ 0.40 mm (0.0059 ~ 0.016 in.)

Second 0.23 ~ 0.48 mm (0.0091 ~ 0.019 in.)

Oil 0.25 ~ 0.75 mm (0.0098 ~ 0.030 in.)

Service Limit:

Top 0.7 mm (0.03 in.)

Second 0.8 mm (0.03 in.)

Oil 1.0 mm (0.039 in.)

Measure Piston Pin, Piston Pin Hole, and Connecting Rod Wear

A. Remove the piston pin.

B.

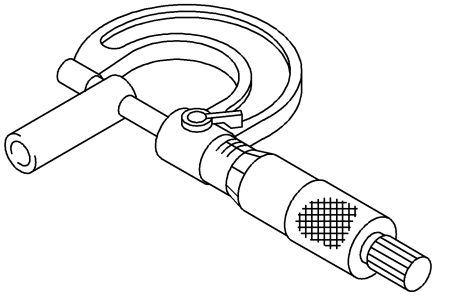

Measure the outside diameter of the piston pin with a micrometer at several points.

C. If the outside diameter is less than service limit, replace the piston pin.

Piston Pin Outside Diameter

Standard: 18.995 ~ 19.000 mm (0.74783 ~ 0.74803 in.)

Service Limit: 18.96 mm (0.7465 in.)

D.

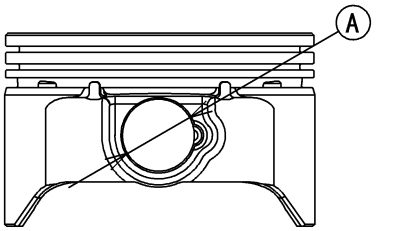

Measure the inside diameter [A] of the piston pin hole at several points on both sides. Use a dial bore gauge.

E. If the inside diameter is more than the service limit, replace the piston.

Piston Pin Hole Inside Diameter

Standard: 19.004 ~ 19.015 mm (0.74819 ~ 0.74862 in.)

Service Limit: 19.08 mm (0.7512 in.)

F.

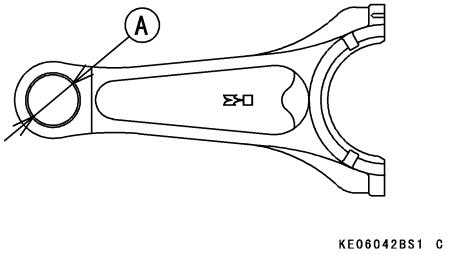

Measure the inside diameter [A] of the small end of the connecting rod at several points. Use a dial bore gauge.

G. If the inside diameter is more than the service limit, replace the connecting rod.

Connecting Rod Small End Inside Diameter

Standard: 19.010 ~ 19.021 mm (0.74842 ~ 0.74886 in.)

Service Limit: 19.06 mm (0.7504 in.)

Measure Piston Diameter

A.

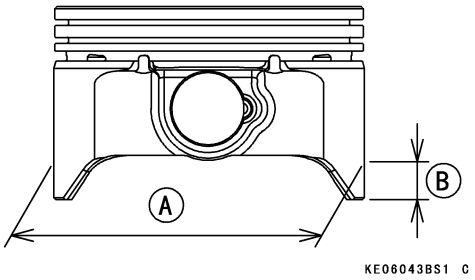

Measure the outside diameter [A] of the piston 18 mm (0.71 in.) up [B] from the bottom of the piston at a right angle to the direction of the piston pin hole.

B. If the measurement is less than the service limit, replace the piston.

Piston Diameter

Standard: 81.935 ~ 81.955 mm (3.2258 ~ 3.2266 in.)

Service Limit: 81.79 mm (3.220 in.)

Check Cylinder Inside Diameter

A. Clean and measure the cylinder inside diameter.

B. Use a dial bore gauge to measure front-to-back and side-to-side at the points as shown in the figure.

C.

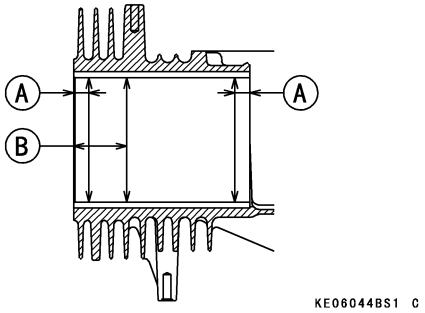

If any of the cylinder bore measurements is greater than the service limit, replace the crankcase.

10 mm (0.39 in.) [A]

35 mm (1.38 in.) [B]

Cylinder Inside Diameter

Standard: 81.97 ~ 81.99 mm (3.227 ~ 3.228 in.)

Service Limit: 82.10 mm (3.232 in.)

Cylinder Bore Out-Round

Service Limit: 0.05 mm (0.002 in.)

CRANKSHAFT AND CONNECTING RODS

Clean/Inspect

A. After removing, clean the crankshaft and connecting rods with a high-flash point solvent and dry them with compressed air.

B. Inspect the teeth of the crankshaft gear for pitting, fatigue cracks, burrs and evidence of improper tooth contact.

C. Replace the gear if necessary.

D. Inspect the crankshaft and connecting rods especially at the bearing surfaces for wear, scratches, evidence of improper contact or other damages.

E. Replace them if necessary.

Measure Connecting Rod Bend/Twist

A. Measure connecting rod bend.

B. Select an arbor of the same diameter as the connecting rod big end, and insert the arbor through the connecting rod big end.

C. Select an arbor of the same diameter as the piston pin and at least 100 mm long, and insert the arbor through the connecting rod small end.

D.

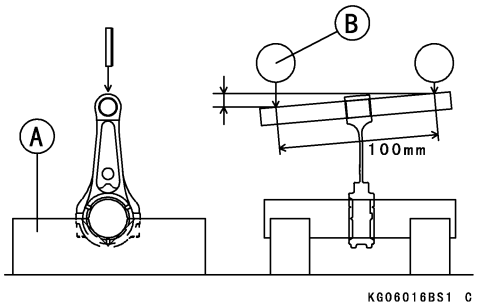

On a surface plate, set the big-end arbor on V blocks [A].

E. With the connecting rod held vertically, use a height gauge [B] to measure the difference in the height of the small end arbor above the surface plate over a 100 mm length to determine the amount of connecting rod bend.

F. If connecting rod bend exceeds the service limit, the connecting rod must be replaced.

Connecting Rod Bend

Service Limit: 0.15/100 mm (0.006/3.94 in.)

G. Measure connecting rod twist.

H.

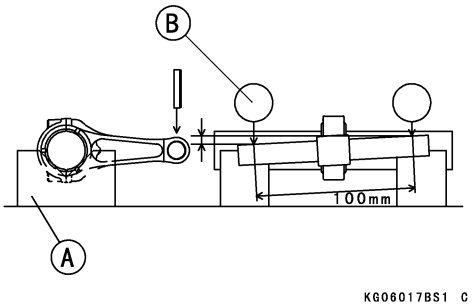

With the big-end arbor still on the V blocks [A], hold the connecting rod horizontally. Use a height gauge [B] to measure the amount that the small end arbor varies from being parallel with the surface plate over a 100 mm length of the arbor to determine the amount of connecting rod twist.

I. If connecting rod twist exceeds the service limit, the connecting rod must be replaced.

Connecting Rod Twist

Service Limit: 0.15/100 mm (0.006/3.94 in.)

Measure Connecting Rod Big End/Crankpin Width Wear

A.

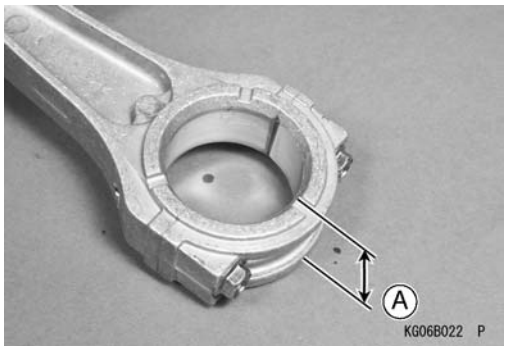

Measure the connecting rod big end width [A] with a micrometer or dial caliper.

B. If the measurement is less than the service limit, replace the connecting rod.

Connecting Rod Big End Width

Standard: 27.4 ~ 27.7 mm (1.08 ~ 1.09 in.)

Service Limit: 27.0 mm (1.06 in.)

C.

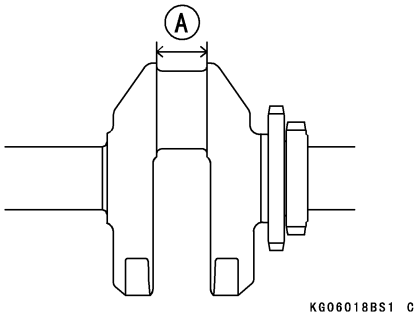

Measure the crankpin width [A] with a dial caliper.

D. If the crankpin width is more than the service limit, replace the crankshaft.

Crankpin Width

Standard: 28.0 ~ 28.2 mm (1.10 ~ 1.11 in.)

Service Limit: 28.4 mm (1.12 in.)

Measure Connecting Rod Big End Bearing/ Crankpin Wear

A. Apply a thin film of oil on the thread of the cap bolts.

B. Install the cap bolts and tighten the bolts to the specified torque (see Install Piston in Section D).

C.

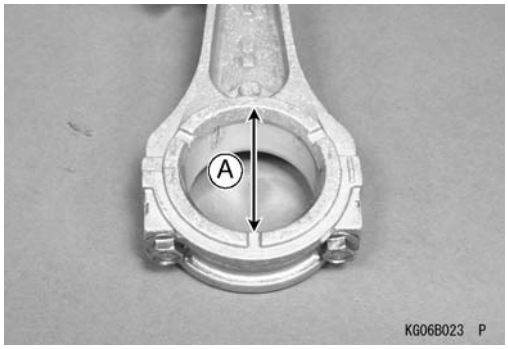

Measure the inside diameter [A] of big end at several points with a telescoping gauge or inside micrometer.

D. If the inside diameter is more than the service limit, replace the connecting rod with a new one.

Connecting Rod Big End Inside Diameter

Standard: 43.004 ~ 43.015 mm (1.6931 ~ 1.6935 in.)

Service Limit: 43.04 mm (1.694 in.)

E.

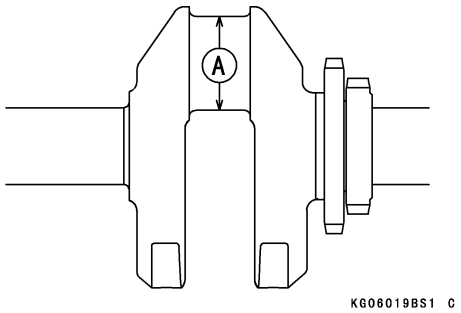

Measure the crankpin outside diameter [A].

F. Use a micrometer to measure several points around the crankpin circumference.

G. If the crankpin diameter is less than the service limit, replace the crankshaft with a new one.

Crankpin Outside Diameter

Standard: 42.963 ~ 42.976 mm (1.6915 ~ 1.6920 in.)

Service Limit: 42.95 mm (1.691 in.)

Measure Crankshaft Runout

A. Measure the crankshaft runout.

B.

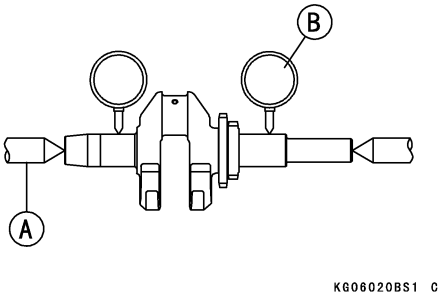

Set the crankshaft in a flywheel alignment jig [A] or on V blocks gauge.

C. Set a dial gauge [B] against both bearing journals.

D. Turn the crankshaft slowly to measure the runout. The difference between the highest and lowest dial gauge readings (TIR) is the amount of runout.

E. If the measurement exceeds the service limit, replace the crankshaft.

Crankshaft Runout

Standard: TIR 0.02 mm (0.0008 in.) or less

Service Limit: TIR 0.05 mm (0.002 in.)

Measure Crankshaft Main Bearing/Journal Wear

A.

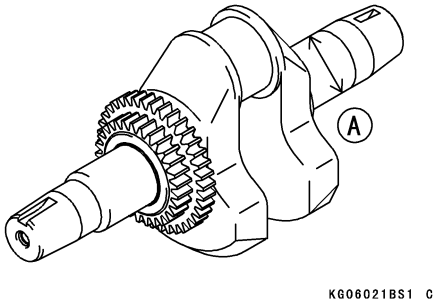

Measure the diameter [A] of the crankshaft main journal.

B. If the journal has worn enough to exceed the service limit, replace the crankshaft with a new one.

Crankcase Side Crankshaft Main Journal Diameter

Standard: 34.955 ~ 34.980 mm (1.3762 ~ 1.3772 in.)

Service Limit: 34.93 mm (1.375 in.)

C.

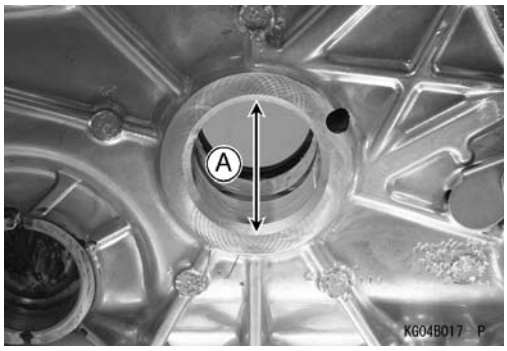

Measure the inside diameter [A] of the crankshaft main bearing (crankcase side).

D. If the bearing has worn enough to exceed the service limit, replace the crankcase with a new one.

Crankshaft Main Bearing Inside Diameter (Crankcase Side)

Standard: 35.002 ~ 35.015 mm (1.3780 ~ 1.3785 in.)

Service Limit: 35.05 mm (1.380 in.)

BALANCER SHAFT

Measure Balancer Shaft Bearing/Journal Wear

A.

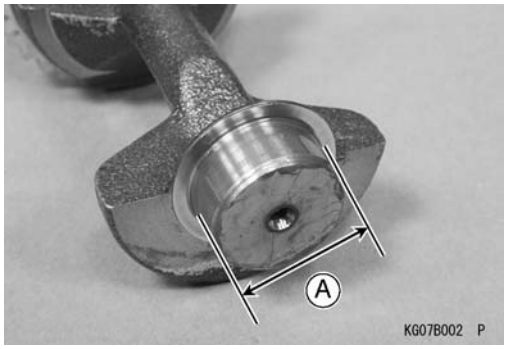

Measure both balancer shaft journal diameters [A] at several points around the journal's circumference.

B. If journal diameter is less than the service limit, replace the balancer shaft with a new one.

Balancer Shaft Journal Diameter

Standard: 31.959 ~ 31.975 mm (1.2582 ~ 1.2589 in.)

Service Limit: 31.935 mm (1.2573 in.)

C.

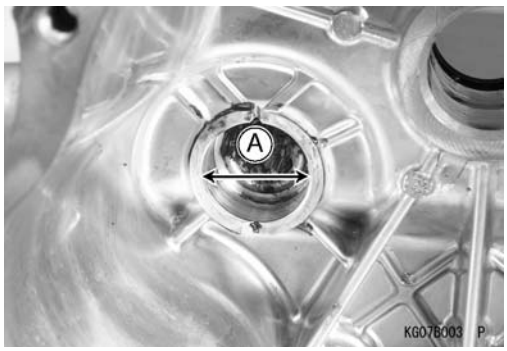

Measure the inside diameter [A] of the balancer shaft bearing on the crankcase at several points.

D. If inside diameter is more than the service limit, replace the crankcase with a new one.

Balancer Shaft Bearing Inside Diameter (Crankcase)

Standard: 32.000 ~ 32.016 mm (1.2598 ~ 1.2605 in.)

Service Limit: 32.06 mm (1.262 in.)

E.

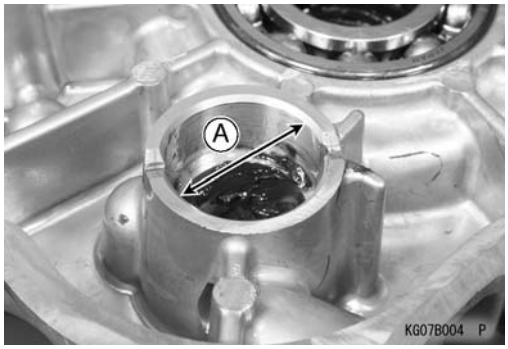

Measure the inside diameter [A] of the balancer shaft bearing on the crankcase cover at several points.

F. If inside diameter is more than the service limit, replace the crankcase cover with a new one.

Balancer Shaft Bearing Inside Diameter (Crankcase cover)

Standard: 32.000 ~ 32.016 mm (1.2598 ~ 1.2605 in.)

Service Limit: 32.06 mm (1.262 in.)

BREATHER VALVE

Inspect Breather Valve

A. Remove the breather valve (see Remove Breather Valve).

B. Inspect the reed valve for breakage, hair cracks or distortion; replace it if necessary.

C. Inspect the back plate for damage or rough contact surface; replace it if necessary.

D. Inspect the valve seating surface. The surface should be free of nicks or burrs.

E. Align center of the valve seat with center of the reed valve and back plate, then tighten the breather valve screw.

Notes:

ENGINE BOTTOM END REASSEMBLY

D

TABLE OF CONTENTS FOR SECTION 'D'

SECTION TITLE **PAGE NO.**

ENGINE BOTTOM END D-1
Tool List D-1

BREATHER VALVE D-1
Install Breather Valve D-1

BALANCER SHAFT D-1
Install Balancer Shaft D-1

CRANKSHAFT AND CONNECTING RODS D-2
Install Crankshaft D-2
Install Connecting Rod D-2

CYLINDERS AND PISTONS D-2
Install Piston D-2

CAMSHAFT AND PISTONS D-4
Install Camshaft, Tappet D-4

CRANKCASE D-4
Assemble Crankcase Cover D-4
Install Crankcase Cover D-4

ENGINE BOTTOM END REASSEMBLY

Notes:

ENGINE BOTTOM END

Tool List **Qty. Required**

Piston Ring Compressor Grip:
E-Z-GO Part No. N/A 1

Piston Ring Compressor Belt, 80 ~ 91:
E-Z-GO Part No. N/A 1

Bearing Driver Set:
E-Z-GO Part No. N/A 1

NOTE *If the engine is not going to be put back into service immediately, completely coat all internal engine components with assembly lube. Tape intake and exhaust openings.*

CAUTION **Prior to engine reassembly, all parts must be thoroughly cleaned; free of dirt, oil, grease, carbon deposits, or residue of any kind; free of nicks, burrs, or damage of any kind to wear surfaces; and inspected for excessive wear. Parts that are damaged or are not within dimensional specifications should be replaced (or machined if applicable). We recommend that parts found to be acceptable but near limits be replaced if the engine will have high usage.**

Because some mating parts with wear surfaces were machined together when the engine was manufactured, or have established wear patterns during operation, the reassembly of engine parts in their original positions and orientations with their original mating parts is critical to the performance and life expectancy of the engine.

When tightening (torquing) a number of screws or bolts in a given pattern, tighten them in two stages. Tighten them to 1/2 of specified torque in one pass through the pattern, and then to specified torque on the second pass.

NOTE *All 4-cycle engine fasteners are plated, and some are lubricated when installed. They are considered "wet" and require approximately 80% of the specified torque of dry fasteners.*

BREATHER

Install Breather Valve

A.

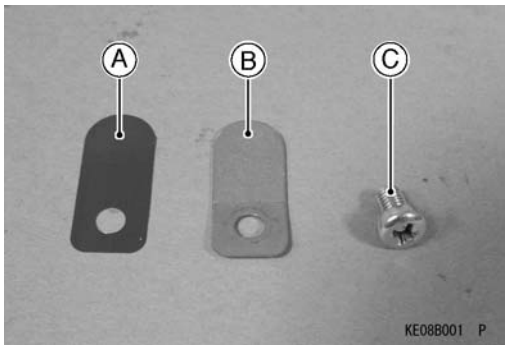

Install the reed valve [A] and back plate [B], then tighten the breather valve screw [C].

Torque - Breather Valve Screw: 3.4 N•m (0.35 kgf•m, 30 in-lb)

B. Install the cylinder head (see Install Cylinder Head in Section A).

BALANCER SHAFT

Install Balancer Shaft

A. Install the balancer shaft to the balancer shaft bearing on the crankcase.

B. Install the crankcase cover (see Install Crankcase Cover).

C.

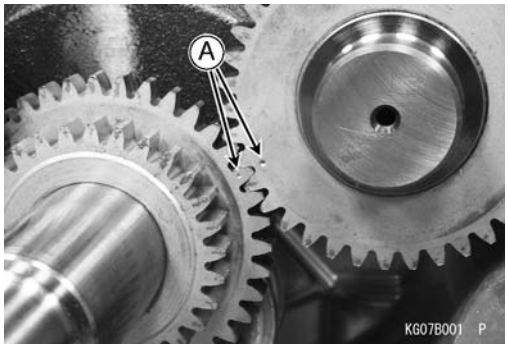

Align the punch marks [A] on the crankshaft gear and on the balancer shaft gear.

CRANKSHAFT AND CONNECTING RODS

Install Crankshaft

A. Clean the crankshaft and crankcase thoroughly, especially at the bearing contact surfaces.

B. Pack grease to 60% volume between the lips of the oil seal on the crankcase. Press in the new oil seal 0 ~1 mm (0 ~ 0.04 in.) below the crankcase surface.

C. Apply molybdenum disulfide grease to the alternator side journal.

D. Apply engine oil to the crank pin and bearing.

E. Insert the crankshaft into the crankcase.

Install Connecting Rod

A. Refer to Install Piston.

CYLINDERS AND PISTONS

Install Piston

A.

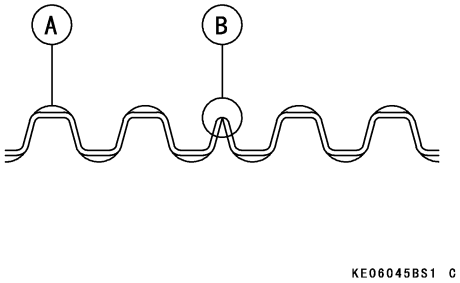

Install the expander [A] in the piston oil ring groove so that the expander ends [B] touch; never overlap.

B.

NOTE

There is no up or down to the rails. They can be installed either way.

Install the upper and lower steel rails.

C.

NOTE

Do not mix up the top and second rings.

Install the second ring so that the notched edge [A] faces down.

NOTE

The rings should turn freely in the grooves.

D. Install the top ring.

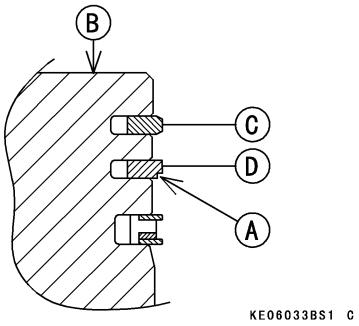

Piston Head [B]

Top Ring [C]

Second Ring [D]

E.

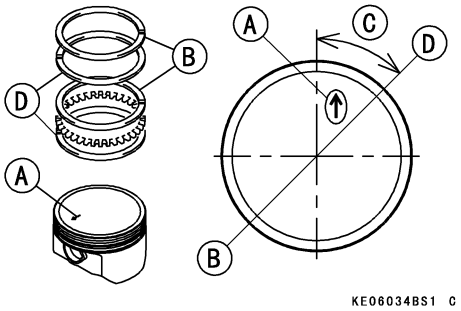

Align the piston and rings with the piston ring end gap as shown.

Arrow Match Marks [A]

Top Ring End Gap, Upper Steel Rail End Gap [B]

About 45° [C]

Second Ring End Gap, Lower Steel Rail End Gap [D]

F. Apply engine oil to the piston pins.

G.

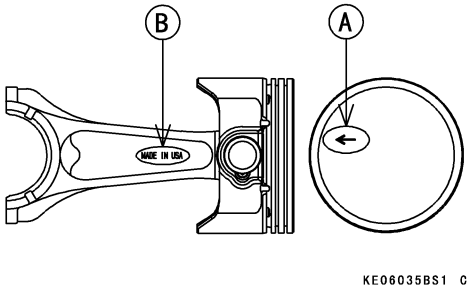

Assemble the piston onto the connecting rod so that the arrow mark [A] on the top of the piston can be aligned with “MADE IN USA” [B] on the connecting rod.

H.

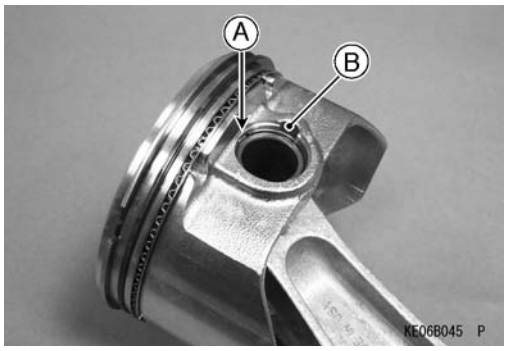

Fit a new piston pin snap ring into the side of the piston so that the ring opening [A] does not coincide with the notch [B] in the edge of the piston pin hole.

NOTE

When installing a piston pin snap ring, compress it only enough to install it and no more.

⚠ CAUTION

Do not reuse the snap rings, as removal weakens and deforms them. They could fall out and score the cylinder wall.

I. Apply engine oil to the piston skirt and the cylinder bore.

J.

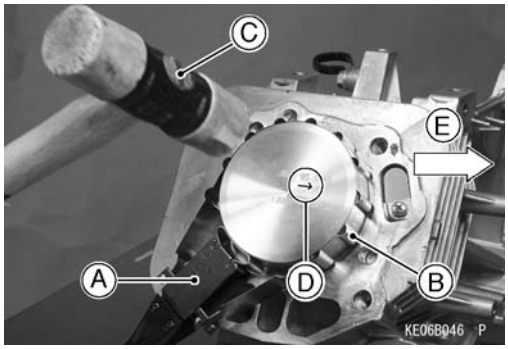

Using the piston ring compressor grip [A] and the belt [B], lightly tap the top of the piston with a plastic mallet [C] to insert the piston and connecting rod into the cylinder.

Special Tools - Piston Ring Compressor Grip:
E-Z-GO Part No. N/A

Piston Ring Compressor Belt, 80 ~ 91:
E-Z-GO Part No. N/A

K. Position the arrow mark [D] on the top of the piston toward the alternator rotor side [E].

⚠ CAUTION

The connecting rod and the connecting rod big end cap are machined at the factory in the assembled state, so they must be replaced together as a set.

L.

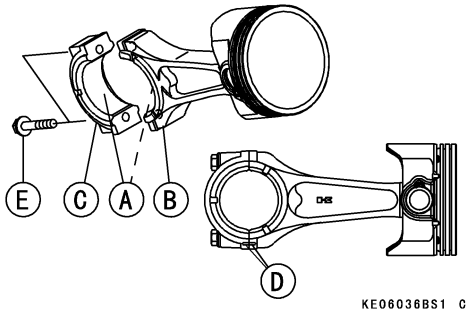

Apply engine oil to the inner surface [A] of the connecting rod big end [B] and cap [C].

M. Install the connecting rod big end cap in its original position on the connecting rod big end by matching the marks [D].

N. Apply a small amount of engine oil to the thread and seating surface of the cap bolts [E].

O. Tighten the cap bolts.

Torque - Connecting Rod Big End Cap Bolts: 5.9 N•m (0.60 kgf•m, 52 in-lb)

P. Install camshaft (see Install Camshaft, Tappet Installation) and crankcase cover (see Install Crankcase Cover).

CAMSHAFT AND PISTONS

Install Camshaft, Tappet

A. Apply engine oil to the tappet journal, cam lobe surface, and camshaft gear.

B. Apply molybdenum disulfide grease to the camshaft journal.

C. Install the tappets in their original positions.

D.

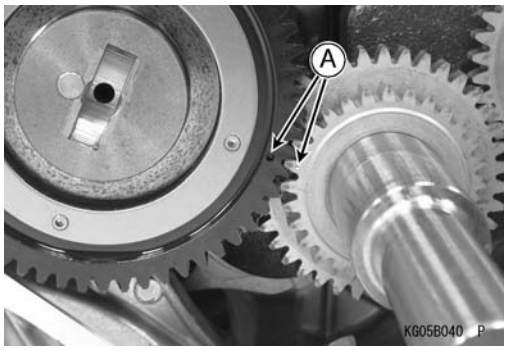

Align the punch marks [A] on the crankshaft gear and on the camshaft gear.

E. Install the crankcase cover (see Install Crankcase Cover).

F. Install the push rods (see Install Cylinder Head in Section A).

G. Mount the rocker arms on the push rods, and install the valve clearance adjusting nuts and the lock screws.

Torque - Valve Adjusting Nut Lock Screws: 6.9 N•m (0.70 kgf•m, 61 in-b)

H. Adjust the valve clearance (see Adjust Valve Clearance in Section C).

I. Install the valve cover.

CRANKCASE

Assemble Crankcase Cover

A.

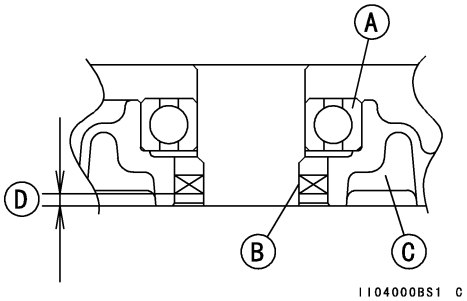

Install the ball bearing [A] until it is bottomed.

Special Tool - Bearing Driver Set:
E-Z-GO Part No. N/A

B. Apply grease to 60% volume between seal lips.

C. Install the oil seal [B] at specified position as shown.

[C] Crankcase Cover

[D] 4.0 ~ 4.5 mm (0.16 ~ 0.18 in.)

Install Crankcase Cover

A.

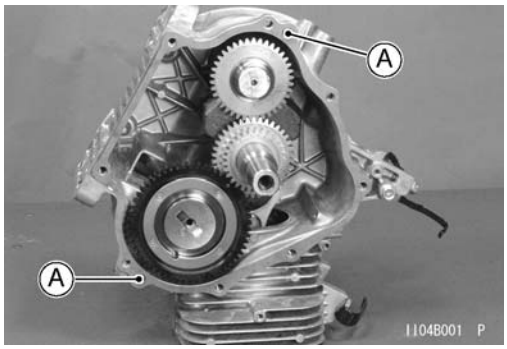

Check to see that the dowel pins [A] are in place on the crankcase.

B. Install the new gasket on the crankcase.

C.

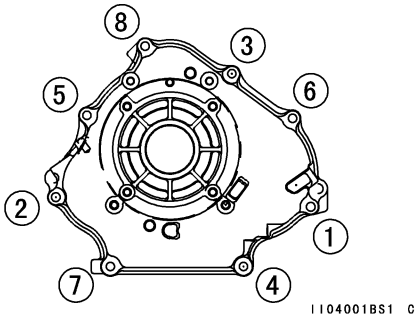

Install the crankcase cover and tighten the crankcase cover bolts following the tightening sequence as shown.

Torque - Crankcase Cover Bolts: 22 N•m (2.2 kgf•m, 16 ft-lb)

Notes:

ENGINE TOP END REASSEMBLY

E

TABLE OF CONTENTS FOR SECTION 'E'

SECTION TITLE **PAGE NO.**

ENGINE TOP END....E-1
Tool List....E-1

VALVES....E-1
Install Valve Mechanism....E-1

CYLINDER HEAD....E-1
Install Cylinder Head....E-1

ENGINE TOP END REASSEMBLY

Notes:

ENGINE TOP END

Tool List **Qty. Required**

Compression Gauge, 20 kgf/cm²:

E-Z-GO Part No. N/A 1

Valve Seat Cutter, 45° - 32:

E-Z-GO Part No. 608665 1

Valve Seat Cutter, 45° - 35:

E-Z-GO Part No. 608666 1

Valve Seat Cutter, 32° - 35:

E-Z-GO Part No. 608667 1

Valve Seat Cutter, 32° - 38.5:

E-Z-GO Part No. 608668 1

Valve Seat Cutter Holder, 7:

E-Z-GO Part No. 608669 1

Valve Seat Cutter Holder Bar:

E-Z-GO Part No. 608670 1

Compression Gauge Adapter, M14 × 1.25:

E-Z-GO Part No. N/A 1

VALVES

Install Valve Mechanism

A. Apply engine oil to the valve stems and install them.

B. Check to see that the valve moves smoothly up and down in the guide.

C. Install the spring and the valve retainer.

D. Install the valve retainer while pushing down the valve retainer with the thumbs.

E. Install cylinder head. See Install Cylinder Head in Section A.

CYLINDER HEAD

Install Cylinder Head

A. Clean the mating surface of the cylinder head and the cylinder.

B.

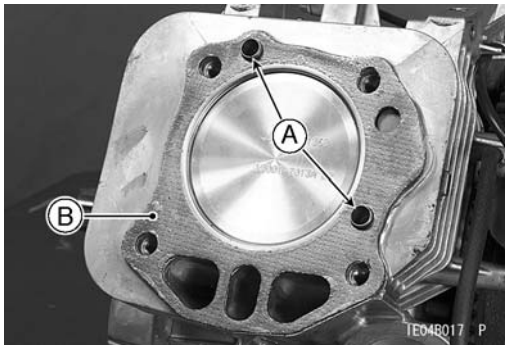

Install the dowel pins [A].

C. Replace the gasket [B] with a new one.

D.

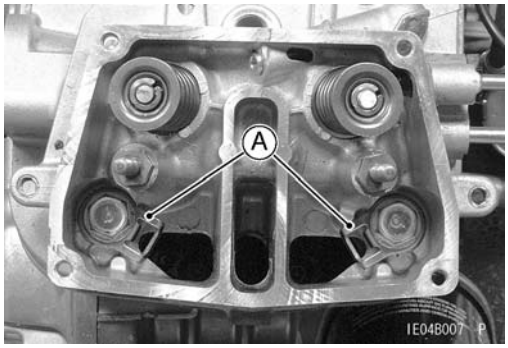

Install cylinder head and push rod guides [A].

E.

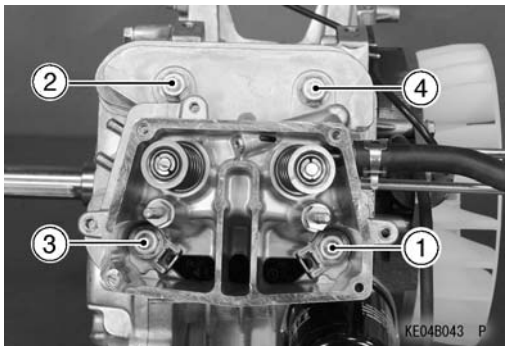

Tighten the cylinder head bolts following the tightening sequence as shown.

Torque - Cylinder Head Bolts: 37 N•m (3.8 kgf•m, 27 ft-lb)

F.

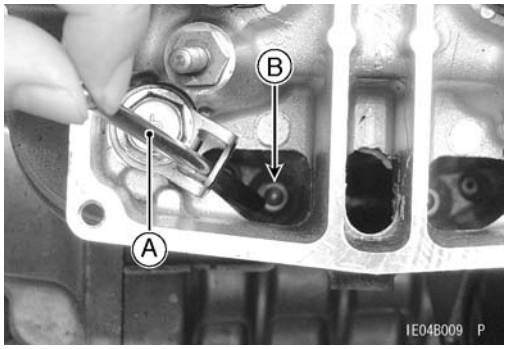

Apply engine oil to the push rods [A] and install them onto the tappets [B].

G.

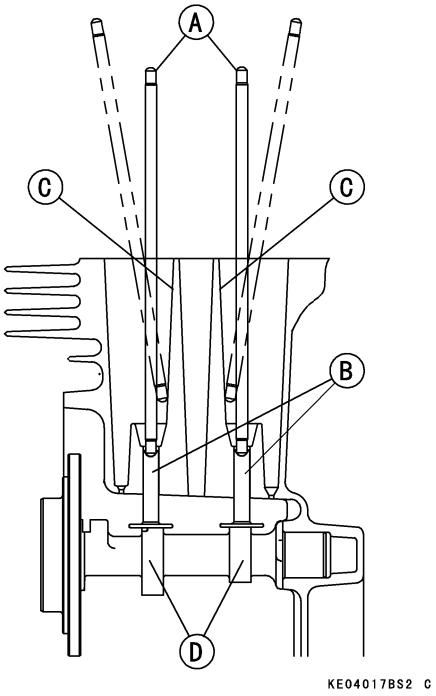

To install the push rods [A] in the correct positions on the tappets [B], insert the push rod so that the end of the push rod is sliding down along inside wall [C] of the crankcase, and position the push rod end onto the tappet.

H. Check that both inlet and exhaust push rods on each cylinder are at the lowest position on the cam lobes [D]. If not, turn the alternator rotor clockwise one turn and position the crankshaft at TDC of the compression stroke.

I. Be sure the ends of the push rods are correctly seated on the tappets.

J. Apply engine oil to the rocker arms.

K. Install rocker arms and valve clearance adjusting nuts.

L. Check and adjust the valve clearance (see Inspect Valve Clearance and Adjust Valve Clearance).

M. Install new gasket and valve cover.

N. Tighten:

Torque - Cylinder Head Cover Bolts: 6.9 N•m (0.70 kgf•m, 61 in-lb)

Engine Shroud Bolts: 5.9 N•m (0.60 kgf•m, 52 in-lb)

ILLUSTRATED PARTS BREAKDOWN

F

TABLE OF CONTENTS FOR SECTION 'F'

SECTION TITLE **PAGE NO.**

CYLINDER/CRANKCASE F-2

PISTON/CRANKSHAFT F-4

VALVE/CAMSHAFT F-6

LUBRICATION F-8

COOLING F-10

ELECTRICAL F-12

CARBURETOR/CABLE BRACKETS F-14

AIR INTAKE/BREATHER - EXHAUST F-16

ILLUSTRATED PARTS BREAKDOWN

Notes:

CYLINDER/CRANKCASE

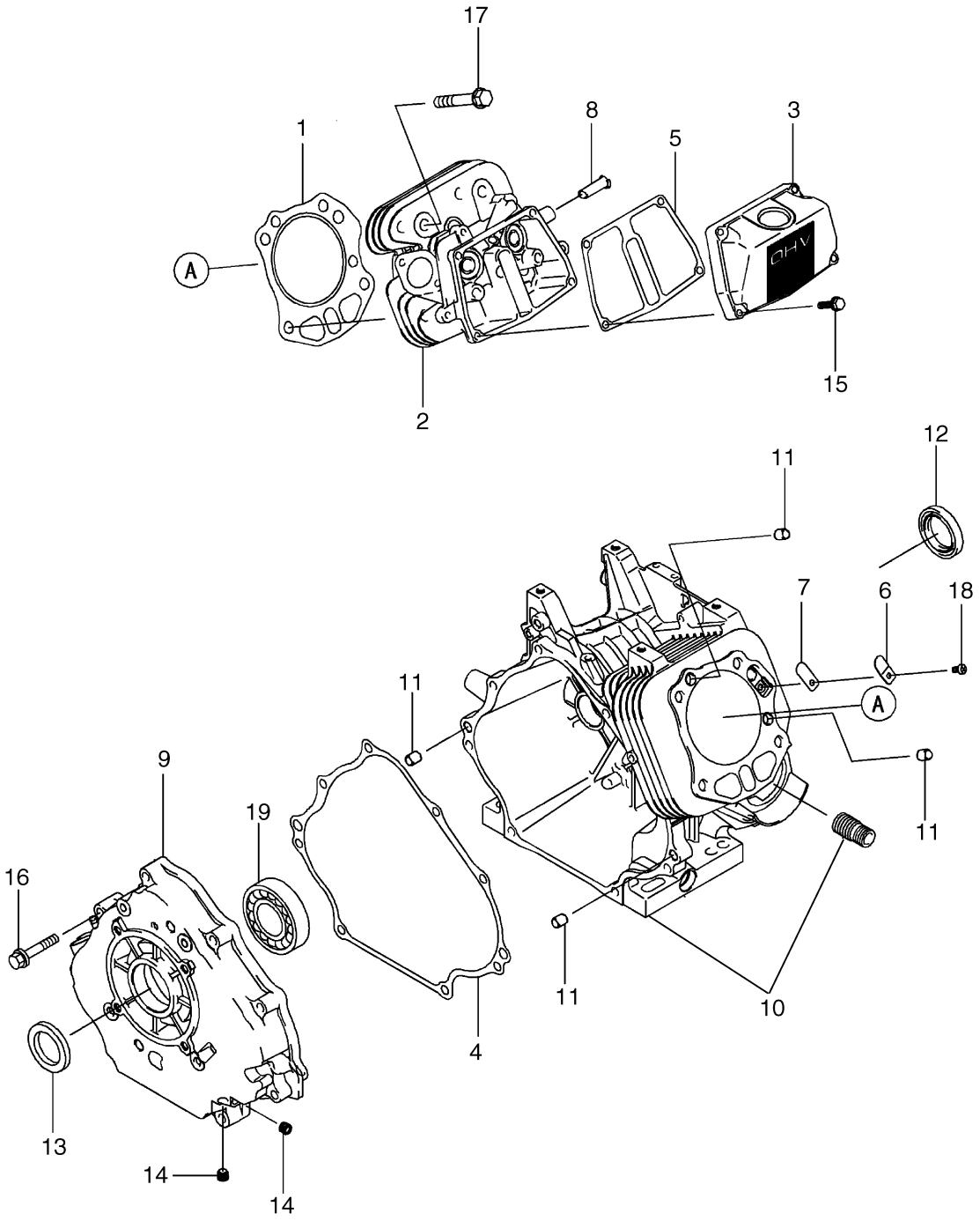

CYLINDER/CRANKCASE				
Item	Description	E-Z-GO Part Number	Quantity	
			GOLF	UTILITY
1	GASKET, HEAD	603510	1	1
2	CYL HEAD, COMPLETE	603511	1	1
3	CASE-ROCKER	607951	1	1
4	GASKET, COVER CRANKCASE	603512	1	1
5	GASKET, CAS-COVER	603513	1	1
6	PLATE BREATHER	603514	1	1
7	VALVE BREATHER	603515	1	1
8	PIPE, BREATHER	603516	1	1
9	COVER CRANKCASE	603517	1	1
10	CRANKCASE COMPLETE	603518	1	1
11	PIN, DOWEL	603519	4	4
12	SEAL-OIL, SD35X48X8	603520	1	1
13	SEAL OIL	603521	1	1
14	PLUG	603522	2	2
15	BOLT FLANGED	603523	4	4
16	BOLT FLANGED	603524	8	8
17	BOLT FLANGED	603525	4	4
18	SCREW, PAS, CROS	603526	1	1
19	BEARING-BALL	603527	1	1

PISTON/CRANKSHAFT

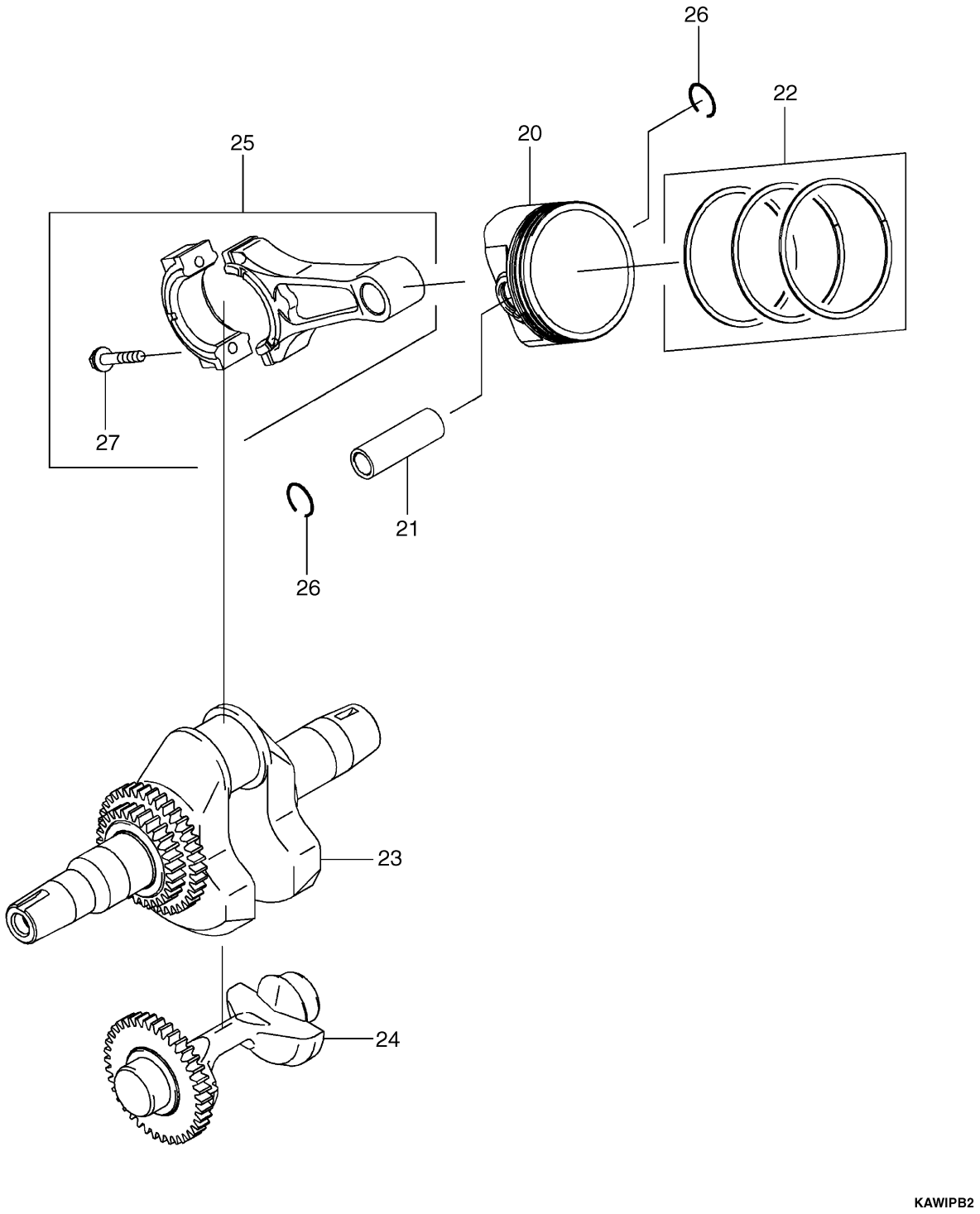

PISTON/CRANKSHAFT				
Item	Description	E-Z-GO Part Number	Quantity	
			GOLF	UTILITY
20	PISTON, ENGINE	603528	1	1
21	PIN, PISTON	603529	1	1
22	RING SET, PISTON	603530	1	1
23	CRANKSHAFT, COMPLETE	603531	1	1
24	BALANCER, COMPLETE	603532	1	1
25	ASSY, CONNECT ROD	603533	1	1
26	RING-SNAP	603534	2	2
27	BOLT, M6X1.0X35.0 LG.	603535	2	2

VALVE/CAMSHAFT

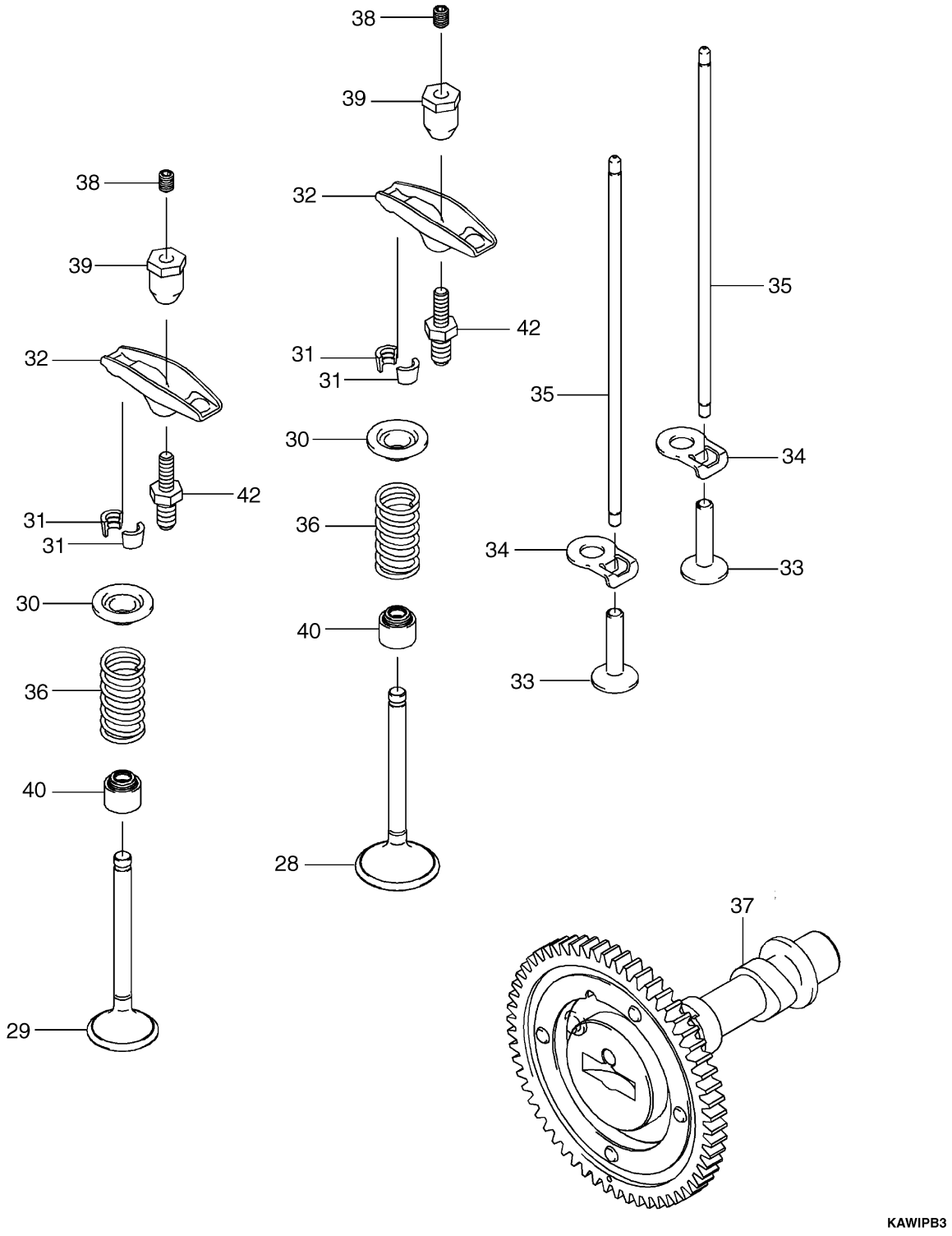

VALVE CAMSHAFT				
Item	Description	E-Z-GO Part Number	Quantity	
			GOLF	UTILITY
28	VALVE, INTAKE	603536	1	1
29	VALVE, EXHAUST	603537	1	1
30	RETAINER, VALVE SPRING	603538	2	2
31	COLLECT	603539	4	4
32	ARM, ROCKER	603540	2	2
33	TAPPET	603541	2	2
34	GUIDE, PUSH ROD	603542	2	2
35	ROD, PUSH	603543	2	2
36	SPRING, ENGINE VALVE	603544	2	2
37	CAMSHAFT-COMPLETE	607461	1	1
38	SCREW	603545	2	2
39	NUT	603546	2	2
40	SEAL OIL	603547	2	2
41	SPRING (NOT SHOWN)	603548	1	1
42	BOLT	603549	2	2

LUBRICATION

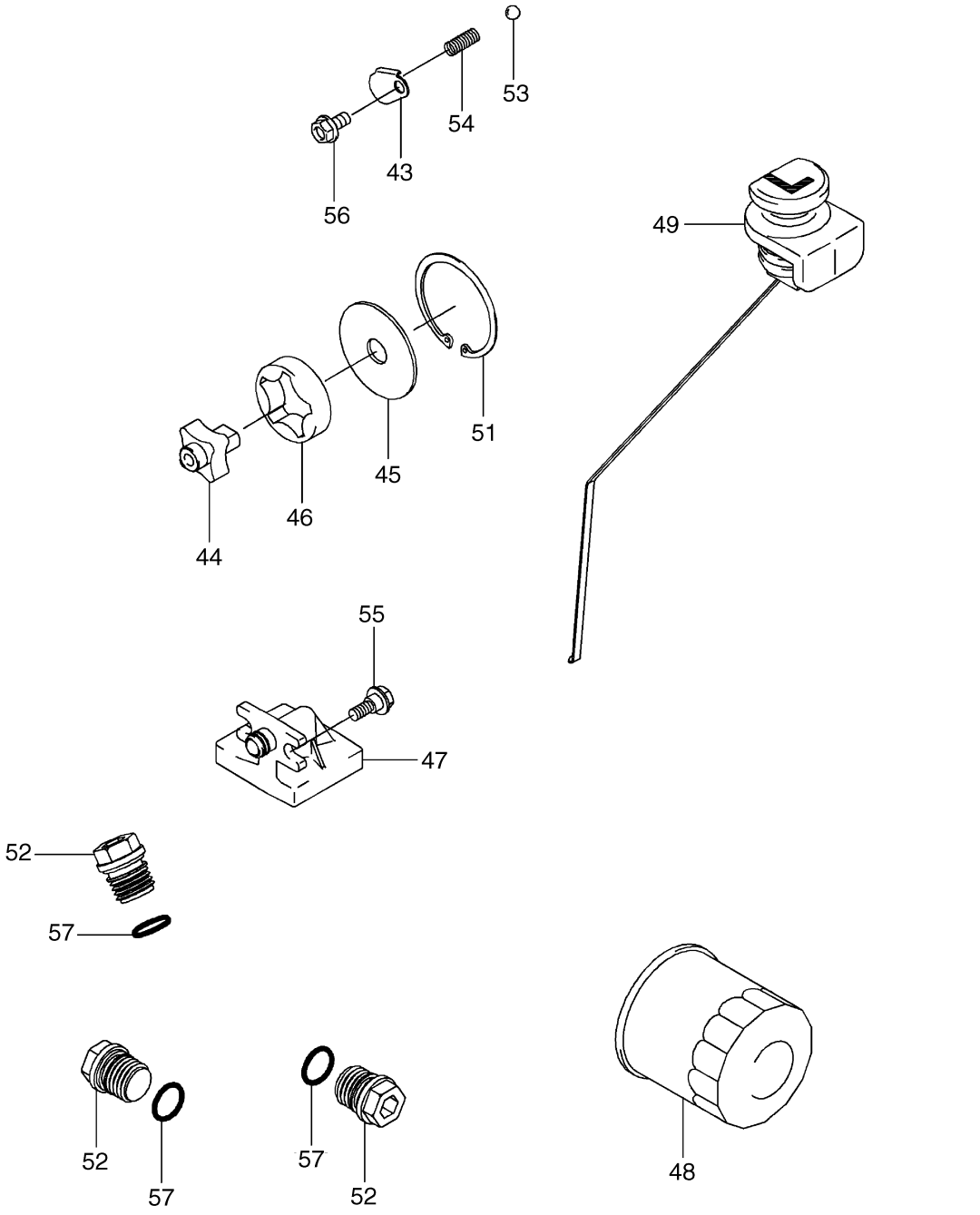

LUBRICATION				
Item	Description	E-Z-GO Part Number	Quantity	
			GOLF	UTILITY
43	PLATE, OIL RELIEF	603550	1	1
44	ASSY OIL PUMP	603552	1	1
45	COVER-PUMP	603553	1	1
46	ROTOR-PUMP, OUTER	603554	1	1
47	PIPE	603555	1	1
48	FILTER, OIL-FJ400D	607454	1	1
49	DIPSTICK OIL, LOW-SUSP	606390	1	1*
50	DIPSTICK OIL, HIGH-SUSP (NOT SHOWN)	606391	-	1*
51	RING SNAP	603556	1	1
52	PLUG	603557	3	3
53	BALL	603558	1	1
54	SPRING, OIL RELIEF	603559	1	1
55	BOLT	603560	2	2
56	BOLT, FLANGED	603561	1	1
57	O RING, 16MM	603562	3	3
58	SWITCH, OIL PRESSURE (NOT SHOWN)	608398	-	1

*** Utility vehicles may be equipped with either high or low suspension. Please be sure to select the correct dipstick P/N for your model.**

COOLING

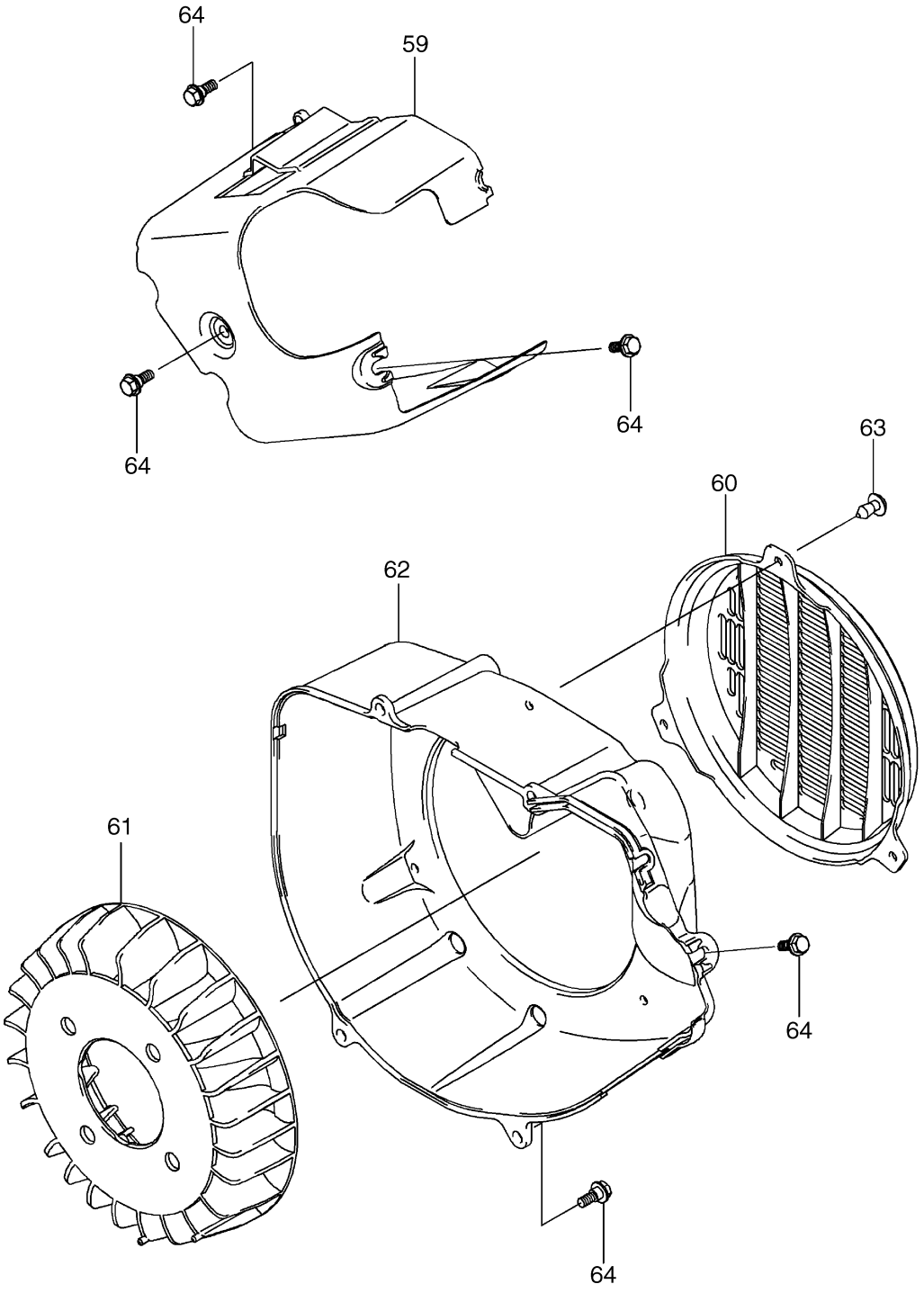

COOLING				
Item	Description	E-Z-GO Part Number	Quantity	
			GOLF	UTILITY
59	SHROUD, ENGINE	603563	1	
60	GUARD	603564	1	1
61	FAN	603566	1	1
62	HOUSING, FAN	603567	1	1
63	RIVET, GUARD	603569	1	1
64	BOLT	603560	5	5

ELECTRICAL

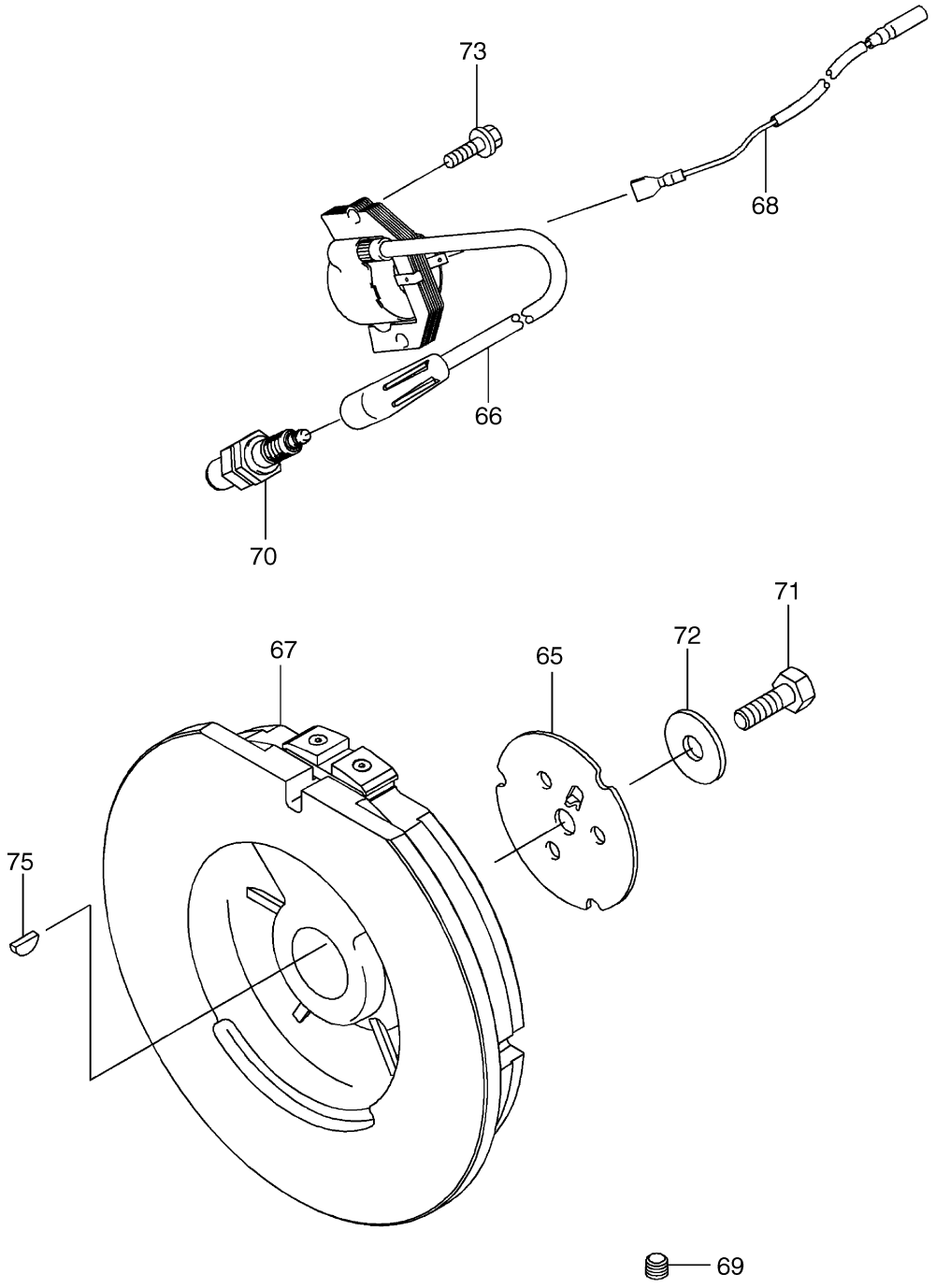

KAWIPB6

ELECTRICAL				
Item	Description	E-Z-GO Part Number	Quantity	
			GOLF	UTILITY
65	PLATE, FAN	603571	1	1
66	ASSY, IGNITION COIL	603572	1	1
67	FLYWHEEL-ASSEMBLY	607463	1	1
68	WIRE-LEAD	603573	1	1
69	PLUG	603522	1	1
70	PLUG-SPARK, BPR2ES	607462	1	1
71	BOLT, M12X39MM LG.	603575	1	1
72	WASHER	603576	1	1
73	BOLT, FLANGED	603577	2	2
74	SCREW, PAN WP CROS (NOT SHOWN)	603578	4	4
75	KEY-WOODRUFF	603579	1	1

CARBURETOR/CABLE BRACKETS

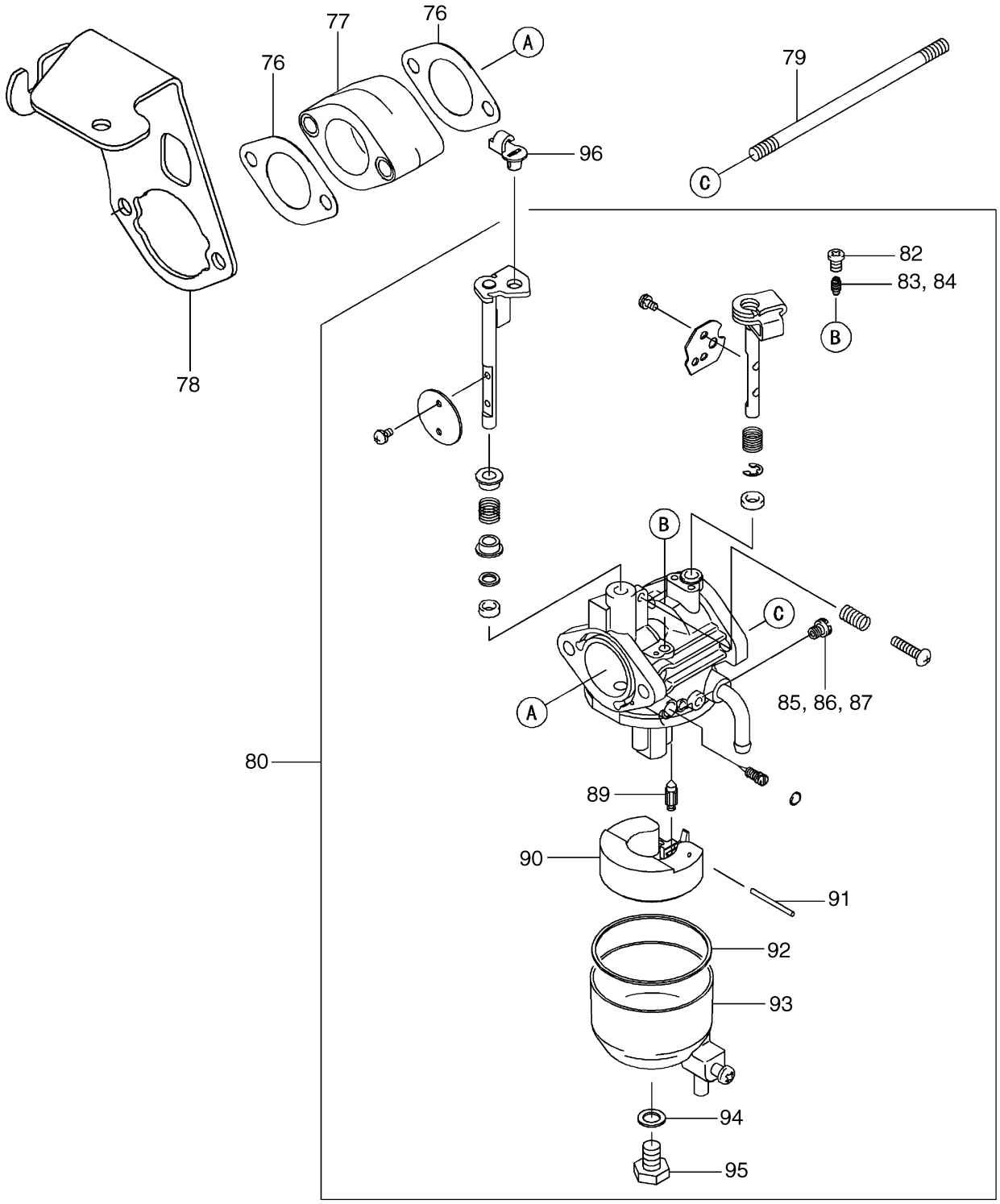

KAWIPB7

CARBURETOR/CABLE BRACKETS				
Item	Description	E-Z-GO Part Number	Quantity	
			GOLF	UTILITY
76	GASKET, HD-CARBURETOR	603580	3	3
77	INSULATOR	603581	1	1
78	BRACKET, CHOKE CABLE	603583	1	1
79	BOLT, STUD	603584	2	2
80	CARBURETOR-AS03	607954	1	-
81	CARBURETOR-AS07 SPEC (NOT SHOWN)	607955	-	1
82	PLUG-PILOT JET	603585	1	1
83	JET-PILOT #44	608021	1	-
84	JET-PILOT #52 (NOT SHOWN)	607957	-	1
85	JET-MAIN #106	607956	-	1
86	JET-MAIN #104	607683	1	-
87	JET-MAIN #102	607684	-	-
88	JET-MAIN #100 (NOT SHOWN)	607685	-	-
89	VALVE-FLOAT	603586	1	1
90	FLOAT	603587	1	1
91	PIN, FLOAT	603588	1	1
92	GASKET, BOWEL	603589	1	1
93	ASSY, FLOAT CHAMBER	603590	1	1
94	GASKET, CHAMBER	603591	1	1
95	PLUG, CHAMBER	603592	1	1
96	BUSHING, THROTTLE ATTACH.	608023	1	1

AIR INTAKE/BREATHER - EXHAUST

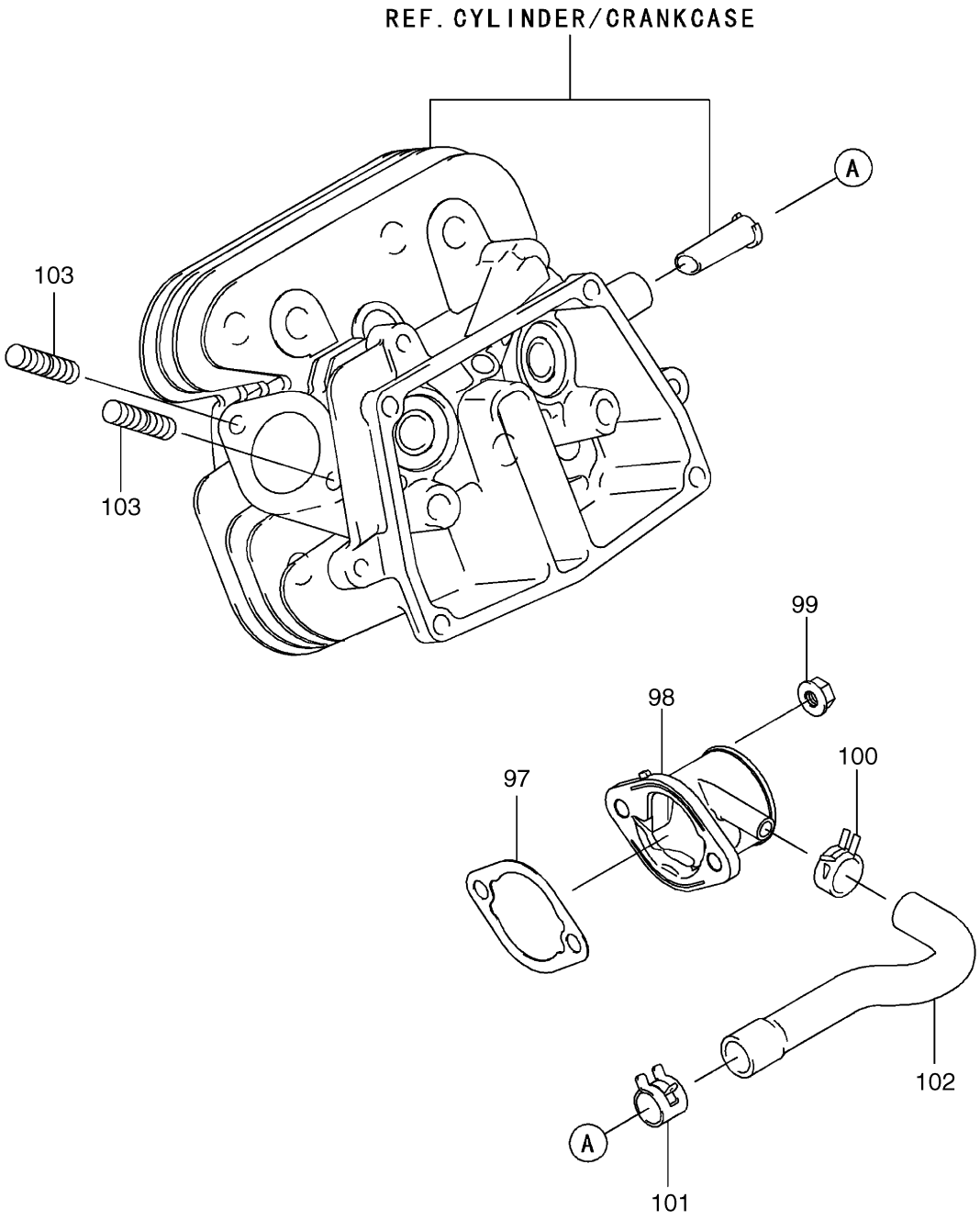

KAWIPB8

AIR INTAKE/BREATHER				
Item	Description	E-Z-GO Part Number	Quantity	
			GOLF	UTILITY
97	GASKET, CHOKE	603593	1	1
98	PIPE-INTAKE	603594	1	1
99	NUT-M6X1.0 V	603595	2	2
100	CLAMP-INTAKE PIPE	603596	1	1
101	CLAMP CYLINDR HEAD	603597	1	1
102	TUBE, BREATHER	603598	1	1
EXHAUST				
103	SCREW, EXHAUST	608022	2	2

Notes:

TABLE OF CONTENTS FOR SECTION 'G'

SECTION TITLE **PAGE NO.**

FEDERAL EMISSION COMPONENT DEFECT WARRANTY G-1

CALIFORNIA EMISSION CONTROL WARRANTY STATEMENT(1995-1999) G-5
YOUR WARRANTY RIGHTS AND OBLIGATIONS G-5
LIMITED WARRANTY on Emission Control Systems - California Only - G-5

CALIFORNIA EMISSION CONTROL WARRANTY STATEMENT (2000) G-8
YOUR WARRANTY RIGHTS AND OBLIGATIONS G-8
LIMITED WARRANTY on Emission Control Systems - California Only - G-8

CALIFORNIA EMISSION CONTROL WARRANTY STATEMENT (2001) G-11
YOUR WARRANTY RIGHTS AND OBLIGATIONS G-11
LIMITED WARRANTY on Emission Control Systems - California Only - G-11

CALIFORNIA EMISSION CONTROL WARRANTY STATEMENT (2004) G-14
YOUR WARRANTY RIGHTS AND OBLIGATIONS G-14
LIMITED WARRANTY on Emission Control Systems - California Only - G-14

LIMITED WARRANTY

Notes:

FEDERAL EMISSIONS COMPONENT DEFECT WARRANTY

EMISSIONS COMPONENT DEFECT WARRANTY COVERAGE - This emission warranty is applicable in all States, except the State of California.

Fuji Heavy Industries Ltd. and E-Z-GO Division of Textron Augusta, Georgia, (herein “E-Z-GO”) warrant(s) to the initial retail purchaser and each subsequent owner, that this Non-road engine (herein “engine”) has been designed, built, and equipped to conform at the time of initial sale to all applicable regulations of the U.S. Environmental Protection Agency (EPA), and that the engine is free of defects in materials and workmanship which would cause this engine to fail to conform with EPA regulations during its warranty period.

For the components listed under PARTS COVERED, the distributor, dealer, or service provider authorized by E-Z-GO will, at no cost to you, make the necessary diagnosis, repair, or replacement necessary to ensure that the engine complies with applicable U.S. EPA regulations.

EMISSION COMPONENT DEFECT WARRANTY PERIOD

The warranty period for this engine begins on the date of sale to the initial purchaser and continues for a period of 2 years.

PARTS COVERED

Listed below are the parts covered by the Emission Components Defect Warranty. Some of the parts listed below may require scheduled maintenance and are warranted up to the first scheduled replacement point for that part.

1) Fuel Metering System
   (i) Carburetor and internal parts (and/or pressure regulator or fuel injection system)
   (ii) Air/fuel ratio feedback and control system, if applicable
   (iii) Cold start enrichment system, if applicable
   (iv) Regulator assy (gaseous fuel, if applicable)
2) Air Induction System
   (i) Intake manifold, if applicable
   (ii) Air filter
3) Ignition System
   (i) Spark plugs
   (ii) Magneto or electronic ignition system
   (iii) Spark advance/retard system, if applicable
4) Exhaust manifold, if applicable
5) Miscellaneous Items Used in Above Systems
   (i) Electronic controls, if applicable
   (ii) Hoses, belts, connectors, and assemblies
   (iii) Filter lock assy (gaseous fuel, if applicable)

OBTAINING WARRANTY SERVICE

To obtain warranty service, take your engine to the nearest authorized E-Z-GO distributor, dealer, or service provider. Bring your sales receipts indicating date of purchase for this engine. The distributor, dealer, or service provider authorized by E-Z-GO will perform the necessary repairs or adjustments within a reasonable amount of time and furnish you with a copy of the repair order. All parts and accessories replaced under this warranty become the property of E-Z-GO.

WHAT IS NOT COVERED

- Conditions resulting from tampering, misuse, improper adjustment (unless they were made by the distributor, dealer, or service provider authorized by E-Z-GO during a warranty repair), alteration, accident, failure to use the recommended fuel and oil, or not performing required maintenance services.
- The replacement parts used for required maintenance services.
- Consequential damages such as loss of time, inconvenience, loss of use of the engine or equipment, etc.
- Diagnosis and inspection charges that do not result in warranty-eligible service being performed.
- Any non-authorized replacement part, or malfunction of authorized parts due to use of non-authorized parts.

OWNER’S WARRANTY RESPONSIBILITIES

As the engine owner, you are responsible for the performance of the required maintenance listed in your owner’s manual. E-Z-GO recommends that you retain all receipts covering maintenance on your engine, but E-Z-GO cannot

deny warranty solely for the lack of receipts or for your failure to ensure the performance of all scheduled maintenance.

As the engine owner, you should however be aware that E-Z-GO may deny warranty coverage if your engine or a part has failed due to abuse, neglect, improper maintenance or unapproved modifications.

You are responsible for presenting your engine to the nearest distributor, dealer, or service provider authorized by E-Z-GO when a problem exists.

If you have any questions regarding your warranty rights and responsibilities, you should contact the E-Z-GO Warranty Department at 1-800-241-5855 for the information.

THINGS YOU SHOULD KNOW ABOUT THE EMISSION CONTROL SYSTEM WARRANTY

MAINTENANCE AND REPAIRS

You are responsible for the proper maintenance of the engine. You should keep all receipts and maintenance records covering the performance of regular maintenance in the event questions arise. These receipts and maintenance records should be transferred to each subsequent owner of the engine. E-Z-GO reserves the right to deny warranty coverage if the engine has not been properly maintained. Warranty claims will not be denied, however, solely because of the lack of required maintenance or failure to keep maintenance records.

> MAINTENANCE, REPLACEMENT OR REPAIR OF EMISSION CONTROL DEVICES AND SYSTEMS MAY BE PERFORMED BY ANY REPAIR ESTABLISHMENT OR INDIVIDUAL; HOWEVER, WARRANTY REPAIRS MUST BE PERFORMED BY A DISTRIBUTOR, DEALER OR, SERVICE PROVIDER AUTHORIZED BY E-Z-GO. THE USE OF PARTS THAT ARE NOT EQUIVALENT IN PERFORMANCE AND DURABILITY TO AUTHORIZED PARTS MAY IMPAIR THE EFFECTIVENESS OF THE EMISSION CONTROL SYSTEM AND MAY HAVE A BEARING ON THE OUTCOME OF A WARRANTY CLAIM.

If other than the parts authorized by E-Z-GO are used for maintenance replacements or for the repair of components affecting emission control, you should assure yourself that such parts are warranted by their manufacturer to be equivalent to the parts authorized by E-Z-GO in their performance and durability.

HOW TO MAKE A CLAIM

All repair qualifying under this limited warranty must be performed by a distributor, dealer, or service provider authorized by E-Z-GO. In the event that any emission-related part is found to be defective during the warranty period, you shall notify E-Z-GO Warranty Department at 1-800-241-5855 and you will be advised of the appropriate warranty service providers where the warranty repair can be performed.

EMISSION COMPONENT DEFECT WARRANTY COVERAGE - This emission warranty is applicable in all states, except the State of California.

Fuji Heavy Industries Ltd. and Textron Golf, Turf & Specialty Products Augusta, Georgia, (herein "Textron Golf, Turf & Specialty Products") warrant(s) to the initial retail purchaser and each subsequent owner, that this Nonroad engine (herein "engine") has been designed, built, and equipped to conform at the time of initial sale to all applicable regulations of the U.S. Environmental Protection Agency (EPA), and that the engine is free of defects in materials and workmanship which would cause this engine to fail to conform with EPA regulations during its warranty period.

For the components listed under PARTS COVERED, the distributor, dealer or service provider authorized by Textron Golf, Turf & Specialty Products will, at no cost to you, make the necessary diagnosis, repair, or replacement necessary to ensure that the engine complies with applicable U.S. EPA regulations.

EMISSION COMPONENT DEFECT WARRANTY PERIOD
The warranty period for this engine begins on the date of sale to the initial purchaser and continues for a period of 2 years.

PARTS COVERED
Listed below are the parts covered by the Emission Component Defect Warranty. Some of the parts listed below may require scheduled maintenance and are warranted up to the first scheduled replacement point for that part.

1) Fuel Metering System
   (i) Carburetor and internal parts (and/or pressure regulator or fuel injection system)
   (ii) Air/fuel ration feedback and control system, if applicable
   (iii) Cold start enrichment system, if applicable
   (iv) Regulator assembly (gaseous fuel, if applicable)
2) Air Induction System
   (i) Intake manifold, if applicable
   (ii) Air filter
3) Ignition System
   (i) Spark plugs
   (ii) Magneto or electronic ignition system
   (iii) Spark advance/retard system, if applicable
4) Exhaust Manifold, if applicable
5) Miscellaneous Items Used in Above Systems
   (i) Electronic controls, if applicable
   (ii) Hoses, belts, connectors and assemblies
   (iii) Filter lock assembly (gaseous fuel, if applicable)

OBTAINING WARRANTY SERVICE
To obtain warranty service, take your engine to the nearest authorized Textron Golf, Turf & Specialty Products distributor, dealer, or service provider. Bring your sales receipts indicating date of purchase for this engine. The distributor, dealer, or service provider authorized by Textron Golf, Turf & Specialty Products will perform the necessary repairs or adjustments within a reasonable amount of time and furnish you with a copy of the repair order. All parts and accessories replaced under this warranty become the property of Textron Golf, Turf & Specialty Products.

WHAT IS NOT COVERED
- Conditions resulting from tampering, misuse, improper adjustment (unless they were made by the distributor, dealer or service provider authorized by Textron Golf, Turf & Specialty Products during a warranty repair), alteration, accident, failure to use the recommended fuel and oil, or not performing required maintenance services.
- The replacement parts used for required maintenance services.
- Consequential damages such as loss of time, inconvenience, loss of use of the engine or equipment, etc.
- Diagnosis and inspection charges that do not result in warranty-eligible service being performed.
- Any non-authorized replacement part, or malfunction of authorized parts due to use of non-authorized parts.

OWNER'S WARRANTY RESPONSIBILITIES:
As the engine owner, you are responsible for the performance of the required maintenance listed in your Owner's Manual. Textron Golf, Turf & Specialty Products recommends that you retain all receipts covering maintenance on your engine, but Textron Golf, Turf & Specialty Products cannot deny warranty solely for the lack of receipts or for your failure to ensure the performance of all scheduled maintenance.

As the engine owner, you should, however, be aware that Textron Golf, Turf & Specialty Products may deny you warranty coverage if your engine or a part has failed due to abuse, neglect, improper maintenance or unapproved modifications.

LIMITED WARRANTY - FEDERAL (2001)

You are responsible for presenting your engine to the nearest distributor, dealer, or service provider authorized by Textron Golf, Turf & Specialty Products when a problem exists.

If you have any questions regarding your warranty rights and responsibilities, you should contact the Textron Golf, Turf & Specialty Products Warranty Department at 1-800-241-5855 for the information.

THINGS YOU SHOULD KNOW ABOUT THE EMISSION CONTROL SYSTEM WARRANTY

MAINTENANCE AND REPAIRS
You are responsible for the proper use and maintenance of the engine. You should keep all receipts and maintenance records covering the performance of regular maintenance in the event questions arise. These receipts and maintenance records should be transferred to each subsequent owner of the engine. Textron Golf, Turf & Specialty Products reserves the right to deny warranty coverage if the engine has not been properly maintained. Warranty claims will not be denied, however, solely because of the lack of required maintenance or failure to keep maintenance records.

> MAINTENANCE, REPLACEMENT OR REPAIR OF EMISSSION CONTROL DEVICES AND SYSTEMS MAY BE PERFORMED BY ANY REPAIR ESTABLISHMENT OR INDIVIDUAL; HOWEVER, WARRANTY REPAIRS MUST BE PERFORMED BY A DISTRIBUTOR, DEALER OR SERVICE PROVIDER AUTHORIZED BY TEXTRON GOLF, TURF & SPECIALTY PRODUCTS. THE USE OF PARTS THAT ARE NOT EQUIVALENT IN PERFORMANCE AND DURABILITY TO AUTHORIZED PARTS MAY IMPAIR THE EFFECTIVENESS OF THE EMISSION CONTROL SYSTEM AND MAY HAVE A BEARING ON THE OUTCOME OF A WARRANTY CLAIM.

If other than the parts authorized by Textron Golf, Turf & Specialty Products are used for maintenance replacements or for the repair of components affecting emission control, you should assure yourself that such parts are warranted by their manufacturer to be equivalent to the parts authorized by Textron Golf, Turf & Specialty Products in their performance and durability.

HOW TO MAKE A CLAIM
All repairs qualifying under this limited warranty must be performed by a distributor, dealer or service provider authorized by Textron Golf, Turf & Specialty Products. In the event that any emission-related part is found to be defective during the warranty period, you shall notify Textron Golf, Turf & Specialty Products Warranty Department at 1-800-241-5855 and you will be advised of the appropriate warranty service providers where the warranty repair can be performed.

CALIFORNIA EMISSION CONTROL WARRANTY STATEMENT

YOUR WARRANTY RIGHTS AND OBLIGATIONS

The California Air Resources Board and Fuji Heavy Industries Ltd. (herein "FUJI") are pleased to explain the emission control system warranty on your 1995 and later specialty vehicle engine (herein "engine"). In California, the engine must be designed, built and equipped to meet the State's stringent anti-smog standards. FUJI must warrant the emission control system on your engine for the period of time described below, provided there has been no abuse, neglect or improper maintenance of your engine.

Your emission control system may include parts such as the carburetor and the ignition system. Also included may be hoses, connectors and other emission-related assemblies.

Where a warrantable condition exists, FUJI will repair your engine at no cost to you including diagnosis, parts and labor.

MANUFACTURER'S WARRANTY COVERAGE:

The 1995 and later engines are warranted for two (2) years. If any emission related part on your engine is defective, the part will be repaired or replaced by FUJI.

OWNER'S WARRANTY RESPONSIBILITIES:

As the engine owner, you are responsible for the performance of the required maintenance listed in your Owner's Manual. FUJI recommends that you retain all receipts covering maintenance on your engine, but FUJI cannot deny warranty solely for the lack of receipts or for your failure to ensure the performance of all scheduled maintenance.

As the engine owner, you should, however, be aware that FUJI may deny you warranty coverage if your engine or a part has failed due to abuse, neglect, improper maintenance or unapproved modifications.

You are responsible for presenting your engine to a dealer, distributor or warranty station authorized by E-Z-GO DIVISION OF TEXTRON, INC. Augusta, Georgia, (herein "E-Z-GO") to which FUJI supplies the engine as soon as a problem exists. The warranty repairs should be completed in a reasonable amount of time, not to exceed 30 days.

If you have any questions regarding your warranty rights and responsibilities, you should contact the E-Z-GO Warranty Department at 1-800-241-5855.

LIMITED WARRANTY

on Emission Control Systems

- California Only -

FUJI, Tokyo, Japan, warrants to the owner of the 1995 and later engine that the engine (1) has been designed, built and equipped so as to conform at the time of manufacture with the applicable regulations of the California Air Resources Board, and (2) is free from defects in materials and workmanship which could cause it to fail to conform with those regulations as may be applicable in the terms and conditions stated below.

A. WARRANTY COMMENCEMENT DATE

The warranty period begins on the date the engine is delivered to a first retail purchaser.

B. LENGTH OF COVERAGE

FUJI warrants to a first retail purchaser and each subsequent purchaser that the engine is free from defects in materials and workmanship which could cause the failure of a warranted emission-related part for a period of two (2) years after the date of delivery to the first retail purchaser.

C. WHAT IS COVERED:

1. REPAIR OR REPLACEMENT PARTS

Repairs and replacement of any warranted part will be performed at no charge to you by an authorized dealer, distributor or a warranty station. You may contact the E-Z-GO Warranty Department at 1-800-241-5855 to get the nearest appropriate location where your warranty repairs are performed.

2. WARRANTY PERIOD

This warranty continues for a period of two (2) years and shall apply only to the repair, replacement or adjustment of the component parts which are not scheduled for replacement as required maintenance. Further, component parts which are scheduled only for regular inspection to the effect of "repair or replace as necessary" shall be warranted for the warranty period. Any warranted

part which is scheduled for replacement as required maintenance shall be warranted for the period of time up to the first scheduled replacement point for that part.

3. DIAGNOSIS

You shall not be charged for diagnostic labor which leads to the determination that a warranted part is defective, if the diagnostic work is performed at an authorized dealer, distributor or warranty station.

4. CONSEQUENTIAL DAMAGES

If a warranted part failed causing damages to other engine components, consult a warranty station.

D. WHAT IS NOT COVERED

1. This limited warranty does not cover any part which malfunctions, fails or is damaged due to failure to follow the maintenance and operating instructions set forth in the 1995 and later Owner's Manual including:
   - (1) improper or inadequate scheduled engine inspection and maintenance
   - (2) improper or inadequate maintenance of any warranted parts
   - (3) improper installation, adjustment or repair of the engine or of any warranted part unless performed by an authorized dealer
   - (4) failure to follow recommendations on fuel use contained in the 1995 and later Owner's Manual
   - (5) repairs performed outside of the authorized warranty service facilities
   - (6) use of parts which are not authorized by FUJI.

2. Add-on or modified parts

This warranty does not cover any part which malfunctions, fails or is damaged due to alterations by changing, adding to or removing parts from the engine.

3. Expenses incurred by processing warranty claims

FUJI, any authorized dealer, distributors and warranty station shall not be liable for any loss of use of the engine, for any alternative usage, for any damage to goods, loss of time or inconvenience.

E. HOW TO FILE A CLAIM

All repairs qualifying under this Limited Warranty must be performed by a dealer who sold you the engine or distributors or warranty stations authorized by E-Z-GO. In the event that any emission-related part is found to be defective during the warranty period, you should notify E-Z-GO Warranty Department at 1-800-241-5855 and you will be given the appropriate warranty service facilities where the warranty repair is performed.

F. WHERE TO GET WARRANTY SERVICE

It is recommended that warranty service be performed by the authorized dealer who sold you the engine, although warranty service will be performed by any authorized dealer, distributor and warranty station anywhere in the United States. When warranty repair is needed, the engine must be brought to an authorized dealer, distributorship or warranty station's place of business during normal business hours. In all cases, a reasonable time, not to exceed 30 days, must be allowed for the warranty repair to be completed after the engine is received by the authorized dealer, distributor or service station.

G. MAINTENANCE, REPLACEMENT AND REPAIR OF EMISSION-RELATED PARTS

Only warranted engine replacement parts approved by FUJI should be used in the performance of any warranty maintenance or repairs on emission-related parts. If other than authorized parts are used for maintenance, replacement or repair of components affecting emission control, you should assure yourself that such parts are warranted by their manufacturer to be equivalent to authorized parts in performance and durability. FUJI, however, assumes no liability under this warranty with respect to parts other than authorized parts. The use of non-authorized replacement parts does not invalidate the warranty on other components unless the non-authorized parts cause damage to warranted parts.

H. PARTS COVERED UNDER THE CALIFORNIA EMISSIONS WARRANTY

- (1) Fuel Metering System
  - (i) Carburetor and internal parts
  - (ii) Choke System
  - (iii) Fuel Filter (annual maintenance item)
- (2) Air Induction System
  - (i) Air Filter Element (semi-annual maintenance item)
- (3) Ignition System
  - (i) Spark Plug (annual maintenance item)
  - (ii) Ignition Coil
  - (iii) Ignitor Complete
  - (iv) Pulser Coil

(4) Exhaust Manifold
(5) Miscellaneous Items Used in Above Systems
(i) Fuel Hoses, Clamps and Sealing Gaskets

I. MAINTENANCE STATEMENTS

It is your responsibility to have all scheduled inspection and maintenance services performed at the times recommended in the 1995 and later Owner's Manual and to retain proof that inspection and maintenance services are performed at the times recommended. FUJI will not deny a warranty claim solely because you have no record of maintenance; however, FUJI may deny a warranty claim if your failure to perform required maintenance resulted in the failure of warranted part. The proof which you maintain should be given to each subsequent owner of the engine. You are responsible for performing the scheduled maintenance described below based on the procedures specified in the 1995 and later Owner's Manual. The scheduled maintenance below is based on the normal engine operating schedule.

PROCEDURE	INTERVAL
a) Check for sealing of fuel cap and proper operation of fuel gauge (at each fueling). Check that fuel cap vent is free of dirt.	WEEKLY
b) Check engine for unusual noise, vibration acceleration.	MONTH (20 HOURS)
c) Check engine electrical system for coil/spark plug wire for cracks/loose connections.	3 MONTH (50 HOURS)
d) Check fuel system for leaks at tank cap, lines, filters, pump, carburetor. Check lines for cracks/deterioration.	3 MONTH (50 HOURS)
e) Check air cleaner filter element.	SEMIANNUAL (125 HOURS)
f) Replace engine oil, DO NOT OVERFILL. Use SAE 10W-30/10W-40 SF,SG,CC oil.	SEMIANNUAL (125-150 HOURS)
g) Clean oil filter in solvent (at oil change). Replace O-rings if required.	SEMIANNUAL (125-150 HOURS)
h) Replace air cleaner filter element if required.	ANNUAL (250-300 HOURS)
i) Check fuel filter for dirt build up. (Replace as required.)	ANNUAL (250-300 HOURS)
j) Check the spark plugs for gap 0.030. (Replace if required.)	ANNUAL (250-300 HOURS)
k) Check timing belt tension; check for signs of wear/ damage. Replace only if worn or damaged.	ANNUAL (250-300 HOURS)

LIMITED WARRANTY - CALIFORNIA (2000)

CALIFORNIA EMISSION CONTROL WARRANTY STATEMENT

YOUR WARRANTY RIGHTS AND OBLIGATIONS

The California Air Resources Board and Fuji Heavy Industries Ltd. (herein "FUJI") are pleased to explain the emission control system warranty on your 2000 and later small off-road engine (herein "engine"). In California, the engine must be designed, built and equipped to meet the State's stringent anti-smog standards. FUJI must warrant the emission control system on your engine for the period of time described below, provided there has been no abuse, neglect or improper maintenance of your engine.

Your emission control system may include parts such as the carburetor and the ignition system. Also included may be hoses, connectors and other emission-related assemblies.

Where a warrantable condition exists, FUJI will repair your engine at no cost to you including diagnosis, parts and labor.

MANUFACTURER'S WARRANTY COVERAGE:

The 2000 and later engines are warranted for two (2) years. If any emission related part on your engine is defective, the part will be repaired or replaced by FUJI.

OWNER'S WARRANTY RESPONSIBILITIES:

As the engine owner, you are responsible for the performance of the required maintenance listed in your Owner's Manual. FUJI recommends that you retain all receipts covering maintenance on your engine, but FUJI cannot deny warranty solely for the lack of receipts or for your failure to ensure the performance of all scheduled maintenance.

As the engine owner, you should, however, be aware that FUJI may deny you warranty coverage if your engine or a part has failed due to abuse, neglect, improper maintenance or unapproved modifications.

You are responsible for presenting your engine to a dealer, distributor or warranty station authorized by E-Z-GO DIVISION OF TEXTRON, INC. Augusta, Georgia, (herein "E-Z-GO") to which FUJI supplies the engine as soon as a problem exists. The warranty repairs should be completed in a reasonable amount of time, not to exceed 30 days.

If you have any questions regarding your warranty rights and responsibilities, you should contact the E-Z-GO Warranty Department at 1-800-241-5855.

LIMITED WARRANTY

on Emission Control Systems

- California Only -

FUJI, Tokyo, Japan, warrants to the owner of the 2000 and later engine that the engine (1) has been designed, built and equipped so as to conform at the time of manufacture with the applicable regulations of the California Air Resources Board, and (2) is free from defects in materials and workmanship which could cause it to fail to conform with those regulations as may be applicable in the terms and conditions stated below.

J. WARRANTY COMMENCEMENT DATE

The warranty period begins on the date the engine is delivered to a first retail purchaser.

K. LENGTH OF COVERAGE

FUJI warrants to a first retail purchaser and each subsequent purchaser that the engine is free from defects in materials and workmanship which could cause the failure of a warranted emission-related part for a period of two (2) years after the date of delivery to the first retail purchaser.

L. WHAT IS COVERED:

1. REPAIR OR REPLACEMENT PARTS

Repairs and replacement of any warranted part will be performed at no charge to you by an authorized dealer, distributor or a warranty station. You may contact the E-Z-GO Warranty Department at 1-800-241-5855 to get the nearest appropriate location where your warranty repairs are performed.

2. WARRANTY PERIOD

This warranty continues for a period of two (2) years and shall apply only to the repair, replacement or adjustment of the component parts which are not scheduled for replacement as required maintenance. Further, component parts which are scheduled only for regular inspection to the effect of "repair or replace as necessary" shall be warranted for the warranty period. Any warranted

part which is scheduled for replacement as required maintenance shall be warranted for the period of time up to the first scheduled replacement point for that part.

3. DIAGNOSIS

You shall not be charged for diagnostic labor which leads to the determination that a warranted part is defective, if the diagnostic work is performed at an authorized dealer, distributor or warranty station.

4. CONSEQUENTIAL DAMAGES

If a warranted part failed causing damages to other engine components, consult a warranty station.

M. WHAT IS NOT COVERED

1. This limited warranty does not cover any part which malfunctions, fails or is damaged due to failure to follow the maintenance and operating instructions set forth in the 2000 and later Owner's Manual including:
   - (1) improper or inadequate scheduled engine inspection and maintenance
   - (2) improper or inadequate maintenance of any warranted parts
   - (3) improper installation, adjustment or repair of the engine or of any warranted part unless performed by an authorized dealer
   - (4) failure to follow recommendations on fuel use contained in the 2000 and later Owner's Manual
   - (5) repairs performed outside of the authorized warranty service facilities
   - (6) use of parts which are not authorized by FUJI.

2. Add-on or modified parts

This warranty does not cover any part which malfunctions, fails or is damaged due to alterations by changing, adding to or removing parts from the engine.

3. Expenses incurred by processing warranty claims

FUJI, any authorized dealer, distributors and warranty station shall not be liable for any loss of use of the engine, for any alternative usage, for any damage to goods, loss of time or inconvenience.

N. HOW TO FILE A CLAIM

All repairs qualifying under this Limited Warranty must be performed by a dealer who sold you the engine or distributors or warranty stations authorized by E-Z-GO. In the event that any emission-related part is found to be defective during the warranty period, you should notify E-Z-GO Warranty Department at 1-800-241-5855 and you will be given the appropriate warranty service facilities where the warranty repair is performed.

O. WHERE TO GET WARRANTY SERVICE

It is recommended that warranty service be performed by the authorized dealer who sold you the engine, although warranty service will be performed by any authorized dealer, distributor and warranty station anywhere in the United States. When warranty repair is needed, the engine must be brought to an authorized dealer, distributorship or warranty station's place of business during normal business hours. In all cases, a reasonable time, not to exceed 30 days, must be allowed for the warranty repair to be completed after the engine is received by the authorized dealer, distributor or service station.

P. MAINTENANCE, REPLACEMENT AND REPAIR OF EMISSION-RELATED PARTS

Only warranted engine replacement parts approved by FUJI should be used in the performance of any warranty maintenance or repairs on emission-related parts. If other than authorized parts are used for maintenance, replacement or repair of components affecting emission control, you should assure yourself that such parts are warranted by their manufacturer to be equivalent to authorized parts in performance and durability. FUJI, however, assumes no liability under this warranty with respect to parts other than authorized parts. The use of non-authorized replacement parts does not invalidate the warranty on other components unless the non-authorized parts cause damage to warranted parts.

Q. PARTS COVERED UNDER THE CALIFORNIA EMISSIONS WARRANTY

- (1) Fuel Metering System
  - (i) Carburetor and internal parts
  - (ii) Choke System
  - (iii) Fuel Filter (annual maintenance item)
- (2) Air Induction System
  - (i) Air Filter Element (semi-annual maintenance item)
- (3) Ignition System
  - (i) Spark Plug (annual maintenance item)
  - (ii) Ignition Coil
  - (iii) Ignitor Complete
  - (iv) Pulser Coil

(4) Exhaust Manifold
(5) Miscellaneous Items Used in Above Systems
(i) Fuel Hoses, Clamps and Sealing Gaskets

R. MAINTENANCE STATEMENTS

It is your responsibility to have all scheduled inspection and maintenance services performed at the times recommended in the 2000 and later Owner's Manual and to retain proof that inspection and maintenance services are performed at the times when recommended. FUJI will not deny a warranty claim solely because you have no record of maintenance; however, FUJI may deny a warranty claim if your failure to perform required maintenance resulted in the failure of warranted part. The proof which you maintain should be given to each subsequent owner of the engine. You are responsible for performing the scheduled maintenance described in the Periodic Service Schedule of this manual. The scheduled maintenance is based on the normal engine operating schedule.

CALIFORNIA EMISSION CONTROL WARRANTY STATEMENT

YOUR WARRANTY RIGHTS AND OBLIGATIONS

The California Air Resources Board and Fuji Heavy Industries Ltd. (herein "FUJI") are pleased to explain the emission control system warranty on your 2001 and later small off-road engine (herein "engine"). In California, the engine must be designed, built and equipped to meet the State's stringent anti-smog standards. FUJI must warrant the emission control system on your engine for the period of time described below, provided there has been no abuse, neglect or improper maintenance of your engine.

Your emission control system may include parts such as the carburetor and the ignition system. Also included may be hoses, connectors and other emission-related assemblies.

Where a warrantable condition exists, FUJI will repair your engine at no cost to you including diagnosis, parts and labor.

MANUFACTURER'S WARRANTY COVERAGE:

The 2001 and later engines are warranted for two (2) years. If any emission related part on your engine is defective, the part will be repaired or replaced by FUJI.

OWNER'S WARRANTY RESPONSIBILITIES:

As the engine owner, you are responsible for the performance of the required maintenance listed in your Owner's Manual. FUJI recommends that you retain all receipts covering maintenance on your engine, but FUJI cannot deny warranty solely for the lack of receipts or for your failure to ensure the performance of all scheduled maintenance.

As the engine owner, you should, however, be aware that FUJI may deny you warranty coverage if your engine or a part has failed due to abuse, neglect, improper maintenance or unapproved modifications.

You are responsible for presenting your engine to a dealer, distributor or service provider authorized by Textron Golf, Turf & Specialty Products Augusta, Georgia, (herein "Textron Golf, Turf & Specialty Products") to which FUJI supplies the engine as soon as a problem exists. The warranty repairs should be completed in a reasonable amount of time, not to exceed 30 days.

If you have any questions regarding your warranty rights and responsibilities, you should contact the Textron Golf, Turf & Specialty Products Warranty Department at 1-800-241-5855.

LIMITED WARRANTY

on Emission Control Systems

- California Only -

FUJI, Tokyo, Japan, warrants to the owner of the 2001 and later engine that the engine (1) has been designed, built and equipped so as to conform at the time of manufacture with the applicable regulations of the California Air Resources Board, and (2) is free from defects in materials and workmanship which could cause it to fail to conform with those regulations as may be applicable in the terms and conditions stated below.

A. WARRANTY COMMENCEMENT DATE

The warranty period begins on the date the engine is delivered to a first retail purchaser.

B. LENGTH OF COVERAGE

FUJI warrants to a first retail purchaser and each subsequent purchaser that the engine is free from defects in materials and workmanship which could cause the failure of a warranted emission-related part for a period of two (2) years after the date of delivery to the first retail purchaser.

C. WHAT IS COVERED:

1. REPAIR OR REPLACEMENT PARTS

Repairs and replacement of any warranted part will be performed at no charge to you by an authorized dealer, distributor or a service provider. You may contact the Textron Golf, Turf & Specialty Products Warranty Department at 1-800-241-5855 to get the nearest appropriate location where your warranty repairs are performed.

2. WARRANTY PERIOD

This warranty continues for a period of two (2) years and shall apply only to the repair, replacement or adjustment of the component parts which are not scheduled for replacement as required maintenance. Further, component parts which are scheduled only for regular inspection to the effect of "repair or replace as necessary" shall be warranted for the warranty period. Any warranted

part which is scheduled for replacement as required maintenance shall be warranted for the period of time up to the first scheduled replacement point for that part.

3. DIAGNOSIS

You shall not be charged for diagnostic labor which leads to the determination that a warranted part is defective, if the diagnostic work is performed at an authorized dealer, distributor or service provider.

4. CONSEQUENTIAL DAMAGES

If a warranted part failed causing damages to other engine components, consult a service provider.

D. WHAT IS NOT COVERED

1. This limited warranty does not cover any part which malfunctions, fails or is damaged due to failure to follow the maintenance and operating instructions set forth in the 2001 and later Owner's Manual including:
   (1) improper or inadequate scheduled engine inspection and maintenance
   (2) improper or inadequate maintenance of any warranted parts
   (3) improper installation, adjustment or repair of the engine or of any warranted part unless performed by an authorized dealer
   (4) failure to follow recommendations on fuel use contained in the 2001 and later Owner's Manual
   (5) repairs performed outside of the authorized warranty service facilities
   (6) use of parts which are not authorized by FUJI.

2. Add-on or modified parts

This warranty does not cover any part which malfunctions, fails or is damaged due to alterations by changing, adding to or removing parts from the engine.

3. Expenses incurred by processing warranty claims

FUJI, any authorized dealer, distributors and service providers shall not be liable for any loss of use of the engine, for any alternative usage, for any damage to goods, loss of time or inconvenience.

E. HOW TO FILE A CLAIM

All repairs qualifying under this Limited Warranty must be performed by a dealer who sold you the engine or distributors or service providers authorized by Textron Golf, Turf & Specialty Products. In the event that any emission-related part is found to be defective during the warranty period, you should notify Textron Golf, Turf & Specialty Products Warranty Department at 1-800-241-5855 and you will be given the appropriate warranty service facilities where the warranty repair is performed.

F. WHERE TO GET WARRANTY SERVICE

It is recommended that warranty service be performed by the authorized dealer who sold you the engine, although warranty service will be performed by any authorized dealer, distributor and service provider anywhere in the United States. When warranty repair is needed, the engine must be brought to an authorized dealer, distributorship or service provider's place of business during normal business hours. In all cases, a reasonable time, not to exceed 30 days, must be allowed for the warranty repair to be completed after the engine is received by the authorized dealer, distributor or service station.

G. MAINTENANCE, REPLACEMENT AND REPAIR OF EMISSION-RELATED PARTS

Only warranted engine replacement parts approved by FUJI should be used in the performance of any warranty maintenance or repairs on emission-related parts. If other than authorized parts are used for maintenance, replacement or repair of components affecting emission control, you should assure yourself that such parts are warranted by their manufacturer to be equivalent to authorized parts in performance and durability. FUJI, however, assumes no liability under this warranty with respect to parts other than authorized parts. The use of non-authorized replacement parts does not invalidate the warranty on other components unless the non-authorized parts cause damage to warranted parts.

H. PARTS COVERED UNDER THE CALIFORNIA EMISSIONS WARRANTY

(1) Fuel Metering System
   (i) Carburetor and internal parts (and/or pressure regulator or fuel injection system)
   (ii) Air/fuel ration feedback and control system, if applicable
   (iii) Cold start enrichment system, if applicable
   (iv) Regulator assembly (gaseous fuel, if applicable)

(2) Air Induction System
   (i) Intake Manifold, if applicable
   (ii) Air Filter

(3) Ignition System
   (i) Spark Plugs
   (ii) Magneto or Electronic Ignition System

(iii) Spark Advance/Retard System, if applicable
(4) Exhaust Manifold, if applicable
(5) Miscellaneous Items Used in Above Systems
(i) Electronic Controls, if applicable
(ii) Hoses, Belts, Connectors, and Assemblies
(iii) Filter Lock Assembly (gaseous fuel, if applicable)

I. MAINTENANCE STATEMENTS

It is your responsibility to have all scheduled inspection and maintenance services performed at the times recommended in the 2001 and later Owner's Manual and to retain proof that inspection and maintenance services are performed at the times when recommended. FUJI will not deny a warranty claim solely because you have no record of maintenance; however, FUJI may deny a warranty claim if your failure to perform required maintenance resulted in the failure of warranted part. The proof which you maintain should be given to each subsequent owner of the engine. You are responsible for performing the scheduled maintenance described in the Periodic Service Schedule of this manual. The scheduled maintenance is based on the normal engine operating schedule.

LIMITED WARRANTY - CALIFORNIA (2004)

CALIFORNIA EMISSION CONTROL WARRANTY STATEMENT

YOUR WARRANTY RIGHTS AND OBLIGATIONS

The California Air Resources Board and Fuji Heavy Industries Ltd. (herein "FUJI") are pleased to explain the emission control system warranty on your 2004 and later small off-road engine (herein "engine"). In California, new engine must be designed, built and equipped to meet the State's stringent anti-smog standards. FUJI must warrant the emission control system on your engine for the period of time described below, provided there has been no abuse, neglect or improper maintenance of your engine.

Your emission control system may include parts such as the carburetor and the ignition system. Also included may be hoses, connectors and other emission-related assemblies.

Where a warrantable condition exists, FUJI will repair your engine at no cost to you including diagnosis, parts and labor.

MANUFACTURER'S WARRANTY COVERAGE:

The 2004 and later engines are warranted for two (2) years. If any emission related part on your engine is defective, the part will be repaired or replaced by FUJI.

OWNER'S WARRANTY RESPONSIBILITIES:

As the engine owner, you are responsible for the performance of the required maintenance listed in your Owner's Manual. FUJI recommends that you retain all receipts covering maintenance on your engine, but FUJI cannot deny warranty solely for the lack of receipts or for your failure to ensure the performance of all scheduled maintenance.

As the engine owner, you should, however, be aware that FUJI may deny you warranty coverage if your engine or a part has failed due to abuse, neglect, improper maintenance or unapproved modifications.

You are responsible for presenting your engine to a dealer, distributor or service provider authorized by E-Z-GO Division of Textron Augusta, Georgia, (herein "E-Z-GO") to which FUJI supplies the engine as soon as a problem exists. The warranty repairs should be completed in a reasonable amount of time, not to exceed 30 days.

If you have any questions regarding your warranty rights and responsibilities, you should contact the E-Z-GO Warranty Department at 1-800-241-5855.

LIMITED WARRANTY

on Emission Control Systems

- California Only -

FUJI, Tokyo, Japan, warrants to the owner of the 2004 and later engine that the engine (1) has been designed, built and equipped so as to conform at the time of manufacture with the applicable regulations of the California Air Resources Board, and (2) is free from defects in materials and workmanship which could cause it to fail to conform with those regulations as may be applicable in the terms and conditions stated below.

J. WARRANTY COMMENCEMENT DATE

The warranty period begins on the date the engine is delivered to a first retail purchaser.

K. LENGTH OF COVERAGE

FUJI warrants to a first retail purchaser and each subsequent purchaser that the engine is free from defects in materials and workmanship which could cause the failure of a warranted emission-related part for a period of two (2) years after the date of delivery to the first retail purchaser.

L. WHAT IS COVERED:

1. REPAIR OR REPLACEMENT PARTS

Repairs and replacement of any warranted part will be performed at no charge to you by an authorized dealer, distributor or a service provider. You may contact the E-Z-GO Warranty Department at 1-800-241-5855 to get the nearest appropriate location where your warranty repairs are performed.

2. WARRANTY PERIOD

This warranty continues for a period of two (2) years and shall apply only to the repair, replacement or adjustment of the component parts which are not scheduled for replacement as required maintenance. Further, component parts which are scheduled only for regular inspection to the effect of "repair or replace as necessary" shall be warranted for the warranty period. Any warranted

part which is scheduled for replacement as required maintenance shall be warranted for the period of time up to the first scheduled replacement point for that part.

3. DIAGNOSIS

You shall not be charged for diagnostic labor which leads to the determination that a warranted part is defective, if the diagnostic work is performed at an authorized dealer, distributor or service provider.

4. CONSEQUENTIAL DAMAGES

If a warranted part failed causing damages to other engine components, consult a service provider.

M. WHAT IS NOT COVERED

1. This limited warranty does not cover any part which malfunctions, fails or is damaged due to failure to follow the maintenance and operating instructions set forth in the 2004 and later Owner's Manual including:
   - (1) improper scheduled engine inspection and maintenance
   - (2) improper maintenance of any warranted parts
   - (3) improper installation, adjustment or repair of the engine or of any warranted part unless performed by an authorized dealer
   - (4) failure to follow recommendations on fuel use contained in the 2004 and later Owner's Manual
   - (5) repairs performed outside of the authorized warranty service facilities
   - (6) use of parts which are not authorized by FUJI

2. Add-on or modified parts

This warranty does not cover any part which malfunctions, fails or is damaged due to alterations by changing, adding to or removing parts from the engine.

3. Expenses incurred by processing warranty claims

FUJI, any authorized dealer, distributors and service providers shall not be liable for any loss of use of the engine, for any alternative usage, for any damage to goods, loss of time or inconvenience.

N. HOW TO FILE A CLAIM

All repairs qualifying under this Limited Warranty must be performed by a dealer who sold you the engine or distributors or service providers authorized by E-Z-GO. In the event that any emission-related part is found to be defective during the warranty period, you should notify E-Z-GO Warranty Department at 1-800-241-5855 and you will be given the appropriate warranty service facilities where the warranty repair is performed.

O. WHERE TO GET WARRANTY SERVICE

It is recommended that warranty service be performed by the authorized dealer who sold you the engine, although warranty service will be performed by any authorized dealer, distributor and service provider anywhere in the United States. When warranty repair is needed, the engine must be brought to an authorized dealer, distributorship or service provider's place of business during normal business hours. In all cases, a reasonable time, not to exceed 30 days, must be allowed for the warranty repair to be completed after the engine is received by the authorized dealer, distributor or service station.

P. MAINTENANCE, REPLACEMENT AND REPAIR OF EMISSION-RELATED PARTS

Only warranted engine replacement parts approved by FUJI should be used in the performance of any warranty maintenance or repairs on emission-related parts. If other than authorized parts are used for maintenance, replacement or repair of components affecting emission control, you should assure yourself that such parts are warranted by their manufacturer to be equivalent to authorized parts in performance and durability. FUJI, however, assumes no liability under this warranty with respect to parts other than authorized parts. The use of non-authorized replacement parts does not invalidate the warranty on other components unless the non-authorized parts cause damage to warranted parts.

Q. PARTS COVERED UNDER THE CALIFORNIA EMISSIONS WARRANTY

- (1) Fuel Metering System
  - (i) Carburetor and internal parts (and/or pressure regulator or fuel injection system)
  - (ii) Air/fuel ratio feedback and control system, if applicable
  - (iii) Cold start enrichment system, if applicable
  - (iv) Regulator assy (gaseous fuel, if applicable)
- (2) Air Induction System
  - (i) Intake Manifold, if applicable
  - (ii) Air Filter
- (3) Ignition System
  - (i) Spark Plugs

(ii) Magneto or Electronic Ignition System.
(iii) Spark Advance/Retard System, if applicable
(4) Exhaust manifold, if applicable
(5) Miscellaneous Items Used in Above Systems
(i) Electronic Controls, if applicable
(ii) Hoses, Belts, Connectors, and Assemblies
(iii) Filter Lock Assy (gaseous fuel, if applicable)

R. MAINTENANCE STATEMENTS

It is your responsibility to have all scheduled inspection and maintenance services performed at the times recommended in the 2004 and later Owner's Manual and to retain proof that inspection and maintenance services are performed at the times when recommended. FUJI will not deny a warranty claim solely because you have no record of maintenance; however, FUJI may deny a warranty claim if your failure to perform required maintenance resulted in the failure of warranted part. The proof which you maintain should be given to each subsequent owner of the engine. You are responsible for performing the scheduled maintenance described in the Periodic Service Schedule of this manual. The scheduled maintenance is based on the normal engine operating schedule.

A Textron Company

E-Z-GO Division of Textron Inc.
1451 Marvin Griffin Rd. Augusta, Georgia 30906 USA

Copyrighted Material
This manual may not be reproduced in whole or
in part without the express permission of
E-Z-GO Division of Textron Inc.
Technical Communications Department